City Council Meeting

Aubrey Community Center
226 Countryside Dr.
Aubrey, TX 76227
May 13, 2025
6:00 PM

**(Notice of Potential Quorum for Planning & Zoning Commission, Board of Adjustment, Library Board, Municipal Development District, and Parks and Recreation Board - even though a quorum of the members of these boards may or may not be present, no official action will be taken by their members.)*

Notice Regarding Remote Participation of Council Members

Pursuant to Section 551.127, Texas Government Code, one or more Council Members may attend this meeting remotely using videoconferencing technology. A quorum of the board will be physically present at the location provided above.

Call to Order - Determine if a Quorum is Present:

Invocation & Pledge of Allegiance: Pledge of Allegiance to the Texas Flag - "Honor the Texas flag; I pledge allegiance to thee, Texas, one state, under God, one, and indivisible."

Community Announcements: Items of community interest may include recognizing Citizens and Staff for outstanding contributions to the community, a reminder about an upcoming event that is organized or sponsored by the governing body, and announcements of an imminent threat to public safety that has arisen after the posting of this agenda.

Citizen Input: Any person may address the City Council. If your comments are concerning an agenda item, you may wait until the discussion on that item if you prefer. Once recognized by the Mayor, please step forward to the speaker's podium, state your name and address and speak directly into the microphone so that people in the room can hear comments and see presentations. Citizen comments are limited to three (3) minutes per individual unless additional time is otherwise required by law. No discussion or action may be taken at this meeting on any

item not listed on the agenda, other than to make statements of factual information or recite existing policy in response to a citizen's inquiry.

New Business: New items requested for consideration.

1. Consideration and action on the resignation of Mike Browning from the Aubrey Municipal Development District Board.

2. Consider and take action on awarding a bid and entering into a Contract with J&L Construction, LLC for the construction of Dane Street and City Hall Parking Improvements for an amount not to exceed $717,240.50 and authorize the City Manager to execute the necessary documents.

3. Consider and take action on a 0.1745-acre land purchase located in the Keeneland Subdivision, Lot 26, Block F(2032 Westwood Drive), Aubrey, Texas, from Qualico Developments Inc. for municipal purposes in an amount not to exceed $80,000, exclusive of closing costs and authorize the City Manager to execute the appropriate documents.

4. Consideration and action on the purchase of an approximate 0.118 acre parcel of property located at 201 Sycamore St., Aubrey Texas in an amount not to exceed $360,000 exclusive of closing costs and authorize the City Manager to execute any necessary documents.

*****EXECUTIVE SESSION***** In accordance with Texas Government Code, Section 551.001, et seq., the City Council will recess into Executive Session (closed meeting) to discuss the following:

5. **Section 551.072 Real Property.** Deliberate the purchase, exchange, lease, or value of real property if deliberation in an open meeting would have a detrimental effect on the position of the governmental body in negotiations with a third person.
   - Property acquisition for municipal purposes
   - Rockhill Road Property

Motion to Recess into Executive Session.

Reconvene into Open Session: In accordance with Texas Government Code, Chapter 551, the City Council will reconvene into Regular Session to consider and take appropriate action, if any, regarding any items discussed in Executive Session.

Workshop Items:

6. Receive a presentation and discuss, and provide direction to staff regarding bonding projects in the capital improvement plan, the I & S tax rate, future initiatives, municipal operations, projects, and strategic plans not limited to, but including:

   a. Property acquisition
   b. Current and Future CIP projects

c. City departments and services as part of the CIP
d. Water and Wastewater projects
e. Bonding estimate from Financial Advisor
f. Bonding for CIP projects
g. Discuss dates for future budget workshops

Future Agenda Requests: Council or Board Members, City Staff, and Citizens may request items to be included on future agendas. Discussion is limited to what the request is for, and if and when the item can be put on a future agenda.

-ADJOURN-

I, Jenny Hicks, City Secretary, certify that this Notice of Meeting was posted, per the Open Meetings Act, on the official bulletin board at the City Hall of the City of Aubrey, Texas and on the City's website at www.aubreytx.gov in accordance with Chapter 551, Texas Government Code, and shall remain posted until the meeting is adjourned.

I certify that the attached notice and agenda of items to be considered by the City Council of the City of Aubrey, Texas was removed by me from the official bulletin board of the City of Aubrey, Texas, 107 South Main St, Aubrey, Texas on the _____day of _____, 2025.

(The City Council reserves the right to adjourn into closed session at any time during the course of this meeting to consult with its attorney regarding any of the matters listed on this document, as authorized by Texas Government Code Section 551.071 Consultation with Attorney.)

This facility is wheelchair accessible and accessible parking spaces are available. Requests for accommodation or interpretive services must be made 48 hours prior to this meeting. Please contact the City Secretary's office at (940) 440-9343 for further information.

City Council Meeting
Staff Report
May 13, 2025

Agenda Item
Consideration and action on the resignation of Mike Browning from the Aubrey Municipal Development District Board.

Staff Contact
Charles Kreidler, City Manager
kreidler@aubreytx.gov
940-440-9343

Summary

Financial Summary

Staff Recommended Action
Approve

Staff Recommended Motion
I move to accept the resignation of Mike Browning.

Charles Kreidler

Subject: FW: MDD updates and meeting location for May 13th meeting

---

From: Mike Browning
Sent: Tuesday, April 29, 2025 10:41 AM
To: Christine Gossett <cgossett@aubreytx.gov>
Cc: Holly Drew <hdrew@aubreytx.gov>; Annabelle Ackling <aackling@toase.com>; nmaxwell@toase.com
Subject: RE: MDD updates and meeting location for May 13th meeting

Christine,

I have been invited to attend the upcoming special called meeting / workshop for City Council on May 13th. This is the same night as the MDD Board meeting, which presents a conflict for me. I cannot serve in both capacities at the same time and so will officially resign from the MDD board as of Friday May 9th. I am sharing the updated date of resignation for your meeting agenda preparation.

Jenny says I could officially wait until Monday, May 12th if you needed to move the MDD meeting up for any reason (needing a quorum, etc.) or to sign documents. Unless I hear from you otherwise, my resignation will be as of Friday, May 9th.

I again share the sentiments of my original email from April 1st, appreciating the opportunity to serve alongside you and fellow MDD Board Members.

Thank you,

Mike D. Browning
Aubrey Economic Development
MDD Board of Directors
Vice President, Place 5
Mbrowning@Aubreytx.gov
www.AubreyMDD.com

City Council Meeting
Staff Report
May 13, 2025

Agenda Item
Consider and take action on awarding a bid and entering into a Contract with J&L Construction, LLC for the construction of Dane Street and City Hall Parking Improvements for an amount not to exceed $717,240.50 and authorize the City Manager to execute the necessary documents.

Staff Contact
Leanne Wilson, Executive Director of Operations
lwilson@aubreytx.gov

Summary
This project consist of approximately 2,104 square yards of 8-inch reinforced concrete pavement with 2,257 square yards of 6-inch thick flexible base, 1,496 square yards of 6-inch reinforced concrete pavement with 1,620 square yards of compacted subgrade, reinforced concrete sidewalk, barrier free ramps, 218 L.F. of 18-inch R.C.P. storm sewer, recessed curb inlets, a 4’x 4’ drop inlet, 140 L.F. of slotted drain, and 91 L.F. 18-inch CGMP as shown in the plans and called for in these specifications.

The project was advertised for bids in the Post Signal on March 28, 2025, and April 4, 2025, and was available through Civicast.

Sealed competitive bids were received and opened on Monday, April 21, 2025. Six bids were received. J&L Construction submitted the lowest total bid of $717,240.50. The contractor's statement of qualifications and references were checked, with no irregularities. The engineer of record on this project also has positive working experience with the bidder.

Staff recommends awarding the bid to J&L Construction, LLC.

Financial Summary
Funds were budgeted with the capital improvement program, and funds are available for this project.

Staff Recommended Action
Approve

Staff Recommended Motion
Motion to award the bid to J&L Construction Services, LLC, and authorize the City Manager to execute documents.

CITY OF AUBREY, TEXAS

CONSTRUCTION PLANS FOR:

DANE STREET AND CITY HALL PAVING & DRAINAGE IMPROVEMENTS

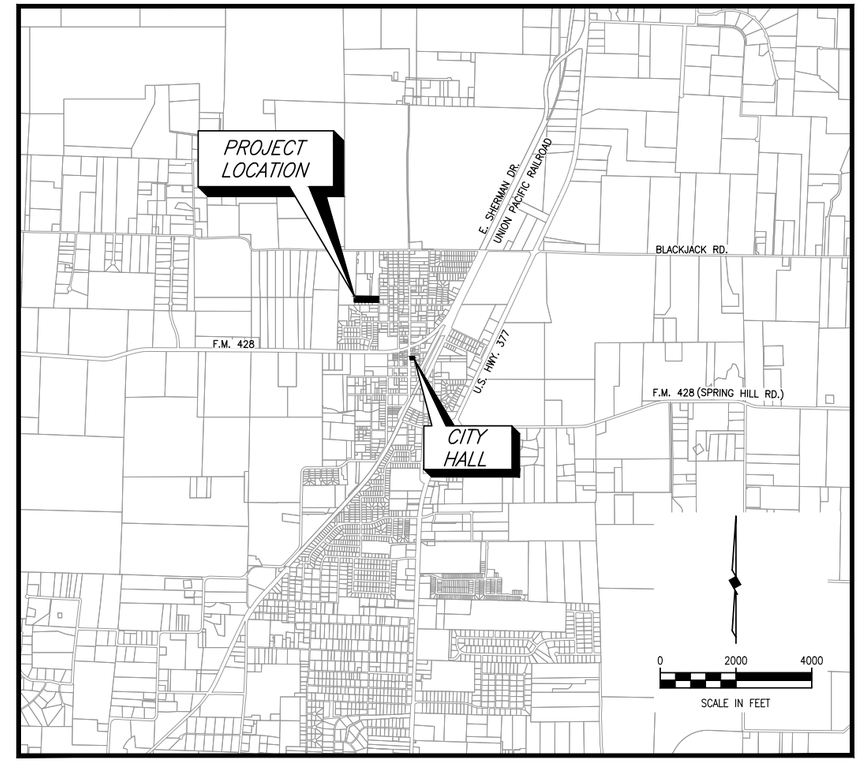

LOCATION MAP

CITY COUNCIL
CHRIS RICH, MAYOR
JEFF PERRY
MATT JONES
ERIN ALLEN
RANDY JONES
CHUCK FIKES

CITY MANAGER
CHARLES KREIDLER

EXECUTIVE DIRECTOR OF OPERATIONS
LEANNE WILSON

SUBSTITUTE DIRECTOR OF PUBLIC WORKS
DEAN RYLANT

March 2025

Aubrey, Texas

STATE OF TEXAS
JOE RICHARD CARTER
64008
REGISTERED PROFESSIONAL ENGINEER

Joe Richard Carter
3/25/2025

Prepared by:
BIRKHOFF, HENDRICKS & CARTER, L.L.P.
PROFESSIONAL ENGINEERS
TBPELS Engineering Firm No. 526 TBPELS Survey Firm No. 10031800
11910 Greenville Ave., Suite 600, Dallas, TX 75243
Phone: 214-361-7900

These plans and related specifications were prepared for construction of this specific project only. Reuse of these documents is not permitted without written authorization of Birkhoff, Hendricks & Carter, L.L.P. If this drawing is converted to an electronic file, if any discrepancy occurs between the electronic file and the Birkhoff, Hendricks & Carter, L.L.P. original document, the original document will govern in all cases.

SHEET INDEX

Sheet No.	Sheet Description
1	COVER SHEET, LOCATION MAP, & SHEET INDEX
2	GENERAL PROJECT NOTES
3	TYPICAL SECTION
4	DANE STREET PHASE 1 PLAN
5	DANE STREET PHASE 2 PLAN
6	PLAN–PROFILE STA. 0+00 TO STA. 4+00
7	PLAN–PROFILE STA. 4+00 TO STA. 7+00
8	DRIVEWAY PROFILE CROSS SECTIONS
9–10	DANE STREET CROSS SECTIONS
11	DANE STREET PAVEMENT MARKINGS AND SIGNAGE
12	DANE STREET EXISTING DRAINAGE
13	DANE STREET PROPOSED DRAINAGE
14	DANE STREET DRAINAGE CALCULATIONS
15–16	DANE STREET STORM SEWER PLAN AND PROFILES
17	TOWN HALL PARKING EXISTING SITE PLAN
18	TOWN HALL PARKING PROPOSED SITE PLAN
19	TOWN HALL PARKING SIGNAGE PLAN
20	TOWN HALL PARKING PROPOSED GRADING PLAN
21	TOWN HALL PARKING EXISTING DRAINAGE
22	TOWN HALL PARKING PROPOSED DRAINAGE
23	TOWN HALL PARKING STORM SEWER P&P
24–34	AUBREY STANDARD DETAILS
34–36	SLOTTED DRAIN DETAILS

GENERAL PROJECT NOTES

NO SEPARATE PAY ITEMS

1. Prior to any construction the Contractor shall be familiar with the Contract Documents and Specifications, the Plans (including all notes), the City of Aubrey TCSS and any other applicable standards or specifications relevant to the proper completion of the work specified. Failure on the part of the Contractor to be familiar with all Standards and Specifications pertaining to this work shall in no way relieve the Contractor of responsibility for performing the work in accordance with all such applicable Standards and Specifications.

2. Contractor shall have in possession, prior to construction, all necessary permits, and licenses, etc. Contractor shall have a least one set of approved Engineering Plans and Specifications on-site at all times.

3. All work shall conform to the City of Aubrey Specifications and Standards unless otherwise specified or shown on the details included in these plans.

4. In the event an item is not covered in the City of Aubrey Construction Standards and Specifications, the North Central Texas Council of Governments (NCTCOG) Standard Specifications for Public Works Construction shall apply with concurrent notification to the City Engineer and Project Engineer. The City Engineer shall have the final decision on all construction materials, methods, and procedures.

5. Construction inspection will be performed by representatives of the City, Geotechnical Engineer or Testing Laboratory and reviewing authorities and agencies. Unrestricted access shall be provided to them at all times. Contractor is responsible for understanding and scheduling required inspections. Testing samples shall be collected and processed by certified technicians.

6. All contractors must confine their activities to the work areas provided. There will be no encroachments onto developed or undeveloped unauthorized areas without specific written permission from the property owner and City approval. Any damage resulting therefrom shall be Contractor's sole responsibility to repair.

7. All underground utility locations as shown on the plans are approximate. The contractor shall be responsible for determining the exact locations of all underground utilities and notifying the various utilities before construction. The determination of the locations of the utilities shall not be considered sufficient basis for claims for additional compensation for extra work or for increasing the pay quantities in any manner whatsoever.

8. It will be the contractor's sole responsibility to protect all existing public and private utilities throughout the construction of this project. The contractor shall be required to call 811 at least 72 hours prior to construction to ensure all underground utilities have been located. Contractor shall also contact the appropriate utility companies for line locations prior to commencement of construction and shall assume full liability to those companies for any damages caused to their facilities. The following lists the most common utilities found in the City of Aubrey with phone numbers, contractor to verify contact information.

9. It shall be the Contractor's sole responsibility to meet all the requirements as specified for Trench Safety and all OSHA requirements for all trenching or tunneling conducted in the project.

10. The Contractor shall not be permitted to have any open trenches at the end of each working day unless approved by the City.

11. All disturbed areas including parkways and medians shall have a minimum of 4" of topsoil prior to placement of sod or hydromulch.

12. The contractor shall provide a clear and safe route for pedestrians where shoulders or sidewalks exist prior to construction, throughout the duration of construction.

13. The contractor shall protect existing trees (including the area under the drip lines of trees) where the trunk is not within the right-of-way, bushes, landscaping plants, sprinklers, and lawns unless shown otherwise on the construction drawings. Any damage not marked on the plans to the existing trees, bushes, landscaping plants, sprinklers, and lawns caused by the construction shall be replaced to the satisfaction of the property owner and the City of Aubrey at the contractor's sole expense.

14. Continuous access for mail service shall be provided during construction.

TRAFFIC CONTROL:

1. All traffic control plans must be submitted by the Contractor for review a minimum of seven working days prior to anticipated lane closures. The traffic control plan must approved by the City of Aubrey prior to beginning construction activity. Traffic control plans may be required on other roadways as determined by the City or the designee. All traffic control plans must be prepared by a professional engineer registered in the State of Texas.

2. Any deviation from an approved traffic control plan must be reviewed by the City Engineer or the designated representative. If an approved traffic control plan is not adhered to, the contractor will first receive a verbal warning and required to correct the problem immediately. If the deviation is not corrected, all construction work will be suspended, the lane closure will be removed and reopened to traffic.

TRAFFIC CONTROL (Continued):

3. A minimum of one clear lane of traffic (11-ft lane) must be maintained at all times. Lane closures will not be permitted on streets adjacent to private or public schools during the hours of 6:00 am to 9:00 am and 3:00 pm to 5:00 pm. Lane closures will not be permitted on arterials during the hours of 4:00 pm to 7:00 pm. The Contractor shall provide adequate flagmen and warning signage for any temporary lane closure. The first violation of this provision will result in a verbal warning to the construction foreman. Subsequent violations can result in suspension of all work at the job site for a minimum of 48 hours. The City Engineer reserves the right to deny a closure for a special event.

4. When the normal function of the roadway is suspended through closure of any portion of the right-of-way, temporary construction work zone traffic control devices shall be installed to effectively guide the motoring public through the area. Consideration for road user safety, worker safety, and the efficiency of road user flow is an integral element of every traffic control zone.

5. The contractor shall provide, construct and maintain barricades and signs in accordance with the Texas Manual of Uniform Traffic Control Devices. All traffic control devices must contain either Type III Hi-Intensity sheeting or Type IV reboundable Hi-Intensity sheeting.

6. All temporary traffic control devices shall be removed as soon as practical when they are no longer needed. When work is suspended for short periods of time at the end of the workday, temporary traffic control devices that are no longer appropriate shall be removed or covered. The first violation of this provision will result in a verbal warning to the construction foreman. Subsequent violations can result in suspension of all work at the job site for a minimum of 48 hours.

7. All roadway embankment placed during various phases of construction shall meet N.C.T.C.O.G. specifications including, but not limited to, Section 203.5.

PAVING:

1. All Barrier Free Ramps shall comply with the current TDLR regulations.

2. Construction joints, cold joints and curb returns shall include fabric for expansion.

3. Sawed joints shall be every 15 feet unless otherwise shown on the plans; and shall be constructed within the first 12 hours after concrete placement. Expansion joints shall be placed every 500 feet.

4. All concrete pavements shall have a minimum compressive strength of 3600 psi, unless a higher compressive strength is specified.

5. Subgrade shall extend 12" minimum behind the curb, be a minimum of 12" thick and be lime stabilized or as shown on the plans or as determined by a lime series approved by the City. The plasticity index shall not exceed 12.

6. All hand placed concrete other than high early strength concrete shall have 1 sack of Portland Cement Concrete added to the approved mixture for 3600 psi standard machine laid concrete. The cost for the additional cement in hand placed concrete shall not be paid for separately but shall be included in the appropriate items of the bid schedule.

7. Reinforcing bars shall be securely wired together at a minimum at alternate intersections. All splices shall be securely wired to each intersected dowel or reinforcement bar and load transmission unit intersected. Reinforcing bars shall be adequately supported by bar chairs to keep reinforcing bars within 1-inch of the center of pavement.

EROSION CONTROL:

1. Every soil disturbing activity shall have an accompanying Erosion Control Plan (ECP), and either Construction Site Notice (CSN) for those activities disturbing more than 1 but less than 5 acres, or Notice of Intent (NOI) for those activities disturbing 5 or more acres including those activities less than 5 acres, but a part of a common plan of development totaling 5 or more acres. A copy of the appropriate CSN or NOI shall be provided to the City of Aubrey prior to issuance of a grading permit. The ECP shall be provided to the City Engineer prior to grading.

2. The CSN or NOI shall be posted in a location viewable to the public until construction is complete and Notice of Termination (NOT) submitted. The Storm Water Pollution Prevention Plan (SWP3) shall be readily available for review by Federal, State, or local officials.

3. No soil disturbing activities will occur prior to the SWP3, ECP, and associated Best Management Practices (BMP) being fully implemented, and then inspected by the City Engineer or his designated representative.

4. The Contractor shall comply with the City of Aubrey's Storm Water Ordinance, the current NCTCOG ISWMTM Design Manual for Construction, the TPDES General Construction Permit TXR040000 and any other State and/or Local regulations.

5. The site shall be reviewed by the operator or his representative weekly, and after any major storm. Adjustments snd/or repairs to the erosion control measures will be made as needed. The Contractor shall notify the City Engineer of adjustments/repairs such that the adjustments/repairs may be inspected and approved by the City Engineer or his designated representative.

EROSION CONTROL (Continued):

6. Contractor shall vegetate all disturbed areas immediately upon completion of grading activities. An appropriate seed mix should be considered with respect to the season and the timing of the final acceptance. A cool season seed mix should be used between September 15th and April 15th. Final acceptance of a site shall be contingent upon perennial vegetation being established in all disturbed areas, and proper NOT submitted to the State. A copy of the NOT shall be provided to the City Engineer.

WATER LINES:

1. Fittings shall be ductile iron meeting AWWA Standard C110 or C153 and shall be cement lined inside and bituminous coated on the outside. Where connections are made to pipes of dissimilar materials, suitable bond breakers shall be used.

2. All ductile iron fittings shall be mechanical joint megalug (Class 125 Drilling) and be rated for minimum 250 psi working pressure. Fittings shall be mortar lined and bituminous coated on the exterior.

3. Pipe joints shall be of the push-on type unless otherwise noted.

4. Valves, vault lids, fire hydrants and meter boxes shall be located outside of sidewalk areas, unless otherwise shown in the plans.

5. All trenching, embedment and backfill shall be incidental to the unit cost of pipe.

6. Water line sections crossing wastewater mains or laterals shall be a minimum of 18 feet long and shall be centered over the wastewater main or lateral such that the joints of the water line are equidistance and at least nine feet horizontally from the center line of the wastewater main or lateral. Whenever possible, the crossing shall be centered between the joints of the wastewater main or lateral.

7. Water Lines shall meet AWWA standards as called for in the construction plans.

8. All trench backfill shall be placed in maximum 8-inch loose lifts and mechanically compacted. Testing shall be in accordance with NCTCOG as a minimum.

9. Work to make connections shall be continuous and shall occur during times of low usage.

10. Valves on lines 12-inch and less shall be gate valves. Gate valves on laterals shall be attached to outlet, tee or cross. Gate valves shall conform to AWWA C-509 or C-515. Butterfly valves shall conform to AWWA C-504. Buried valves shall be mechanical joint type with megalugs. Valves above ground shall be flange type.

11. Dewatering of water line trench may be required during construction. Dewatering is subsidiary to pipe installation.

12. Contractor to construct water line to grade shown in the plans. All water lines shall have a minimum cover of 4 feet.

13. During water line testing contractor to dechlorinate in accordance with TCEQ requirements prior to releasing water overland and into storm drainage systems.

14. All exterior surfaces of valves, fire hydrants, pipe, support structures, nuts, bolts and metal appurtenances shall be properly prepared to paint manufacturers specifications and coated with one coat high performance epoxy (3 mils dryfilm thickness) and two coats of high performance polyethylene (2 mils dry film thickness). Hydrants shall be coated by the manufacturer. The hydrant color shall be selected by the City.

15. Contractor to support all existing utilities as construction of new water line crosses these utilities. No separate pay item.

16. Bolts and nuts for mechanical joints will be of a high-strength low-alloy corrosion resistant steel conforming to ASTM A325 (Type 3).

17. Assembly of pipe to be performed as required by pipe manufacturer. Gaskets shall be clear and lubricated. Do not swing or stab the joint. Align the spigot to the bell, insert spigot into bell and contact gasket. The spigot end is marked with insertion mark. Insert pipe to the mark, do not over-insert.

18. All valve stacks shall be set at finished grade and have house keeping pads.

19. Contractor shall field locate pipelines at connection points prior to ordering or fabricating proposed pipe. Contractor shall verify pipe size, type, elevation and horizontal location. Contractor shall make all necessary adjustments to connect to existing line after approval from the engineer.

These plans and related specifications were prepared for construction of this specific project only. Reuse of these documents is not permitted without written authorization of Birkhoff, Hendricks & Carter, L.L.P. If this drawing is converted to an electronic file, if any discrepancy occurs between the electronic file and the Birkhoff, Hendricks & Carter, L.L.P. original document, the original document will govern in all cases.

BIRKHOFF, HENDRICKS & CARTER, L.L.P.
PROFESSIONAL ENGINEERS
TBPE Firm No. 526; TBPLS Firm No. 10031800
11910 Greenville Ave., Suite 600
Dallas, Texas 75243 (214) 361-7900

STATE OF TEXAS
JOE RICHARD CARTER
64008
REGISTERED PROFESSIONAL ENGINEER

Joe Richard Carter
3/25/2025

CITY OF AUBREY, TEXAS
DANE STREET IMPROVEMENTS AND CITY HALL PARKING IMPROVEMENTS

GENERAL NOTES

BHC PROJECT NO. 2024-134

March, 2025

SHEET NO. **2**

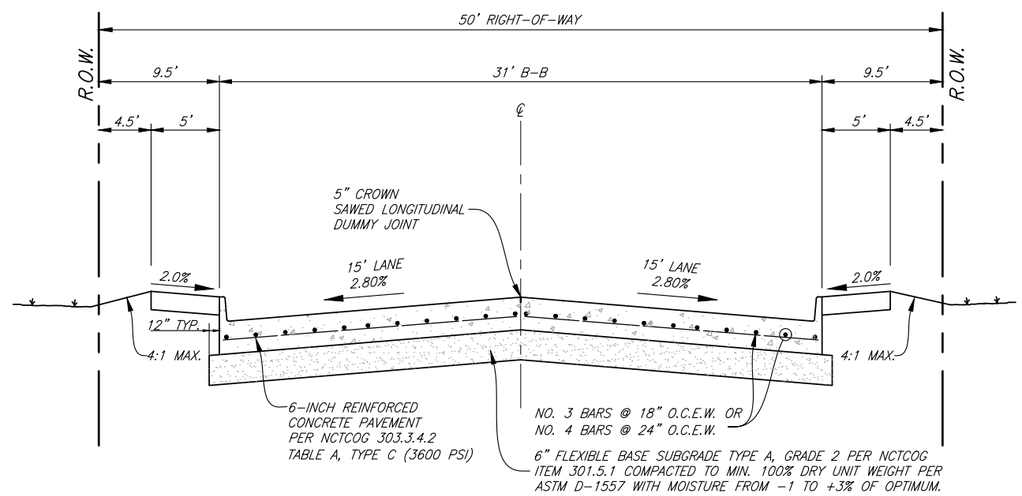

LOCAL (RESIDENTIAL STREET)

N.T.S.

These plans and related specifications were prepared for construction of this specific project only. Reuse of these documents is not permitted without written authorization of Birkhoff, Hendricks & Carter, L.L.P. If this drawing is converted to an electronic file, if any discrepancy occurs between the electronic file and the Birkhoff, Hendricks & Carter, L.L.P. original document, the original document will govern in all cases.

BIRKHOFF, HENDRICKS & CARTER, L.L.P.
PROFESSIONAL ENGINEERS
TBPE Firm No. 526; TBPLS Firm No. 10031800
11910 Greenville Ave., Suite 600
Dallas, Texas 75243 (214) 361-7900

STATE OF TEXAS
JOE RICHARD CARTER
64008
REGISTERED PROFESSIONAL ENGINEER

Joe Richard Carter
3/25/2025

CITY OF AUBREY, TEXAS
DANE STREET IMPROVEMENTS AND CITY HALL PARKING IMPROVEMENTS

TYPICAL SECTION

BHC PROJECT NO. 2024-134

March, 2025

SHEET NO. **3**

REVISED: 3/28/25 – JCARTER H:\Projects\Aubrey\2024134 Dane Street P&D\Sheets\2024134 Typical Sections.dwg PLOT SCALE: 1:2 PLOT STYLE: 11x17.ctb PLOTTED BY: TRISTAN BOOS ON 3/28/2025

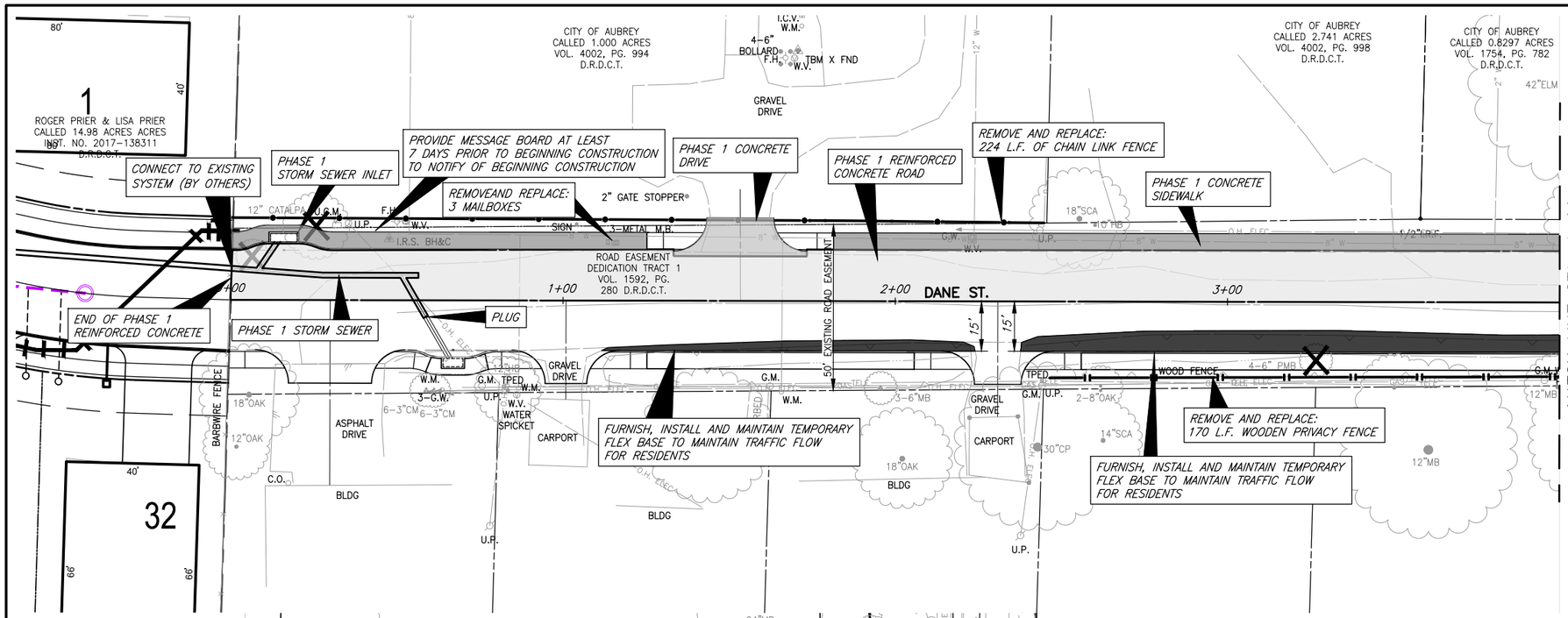

TRAFFIC CONTROL NOTES

1. REFER TO TRAFFIC CONTROL NOTES WITH GENERAL PROJECT NOTES ON SHEET 2.
2. CONTRACTOR SHALL PROVIDE FLAGMEN AND OTHER DEVICES AS REQUIRED TO MAINTAIN A MINIMUM OF ONE CLEAR 11-FT WIDE LANE OF TRAFFIC THROUGHOUT CONSTRUCTION. ALTERNATIVELY CONTRACTOR MAY PROVIDE A MINIMUM (2) 11-FT WIDE LANES WITHOUT FLAGMEN IF APPROVED FOR PHASE 1 CONSTRUCTION.
3. FLAGMEN WILL BE REQUIRED TO FINISH CONSTRUCTION OF THE CONCRETE PAVEMENT FOR PHASE 2.

0 20 40 60
HORIZONTAL SCALE IN FEET

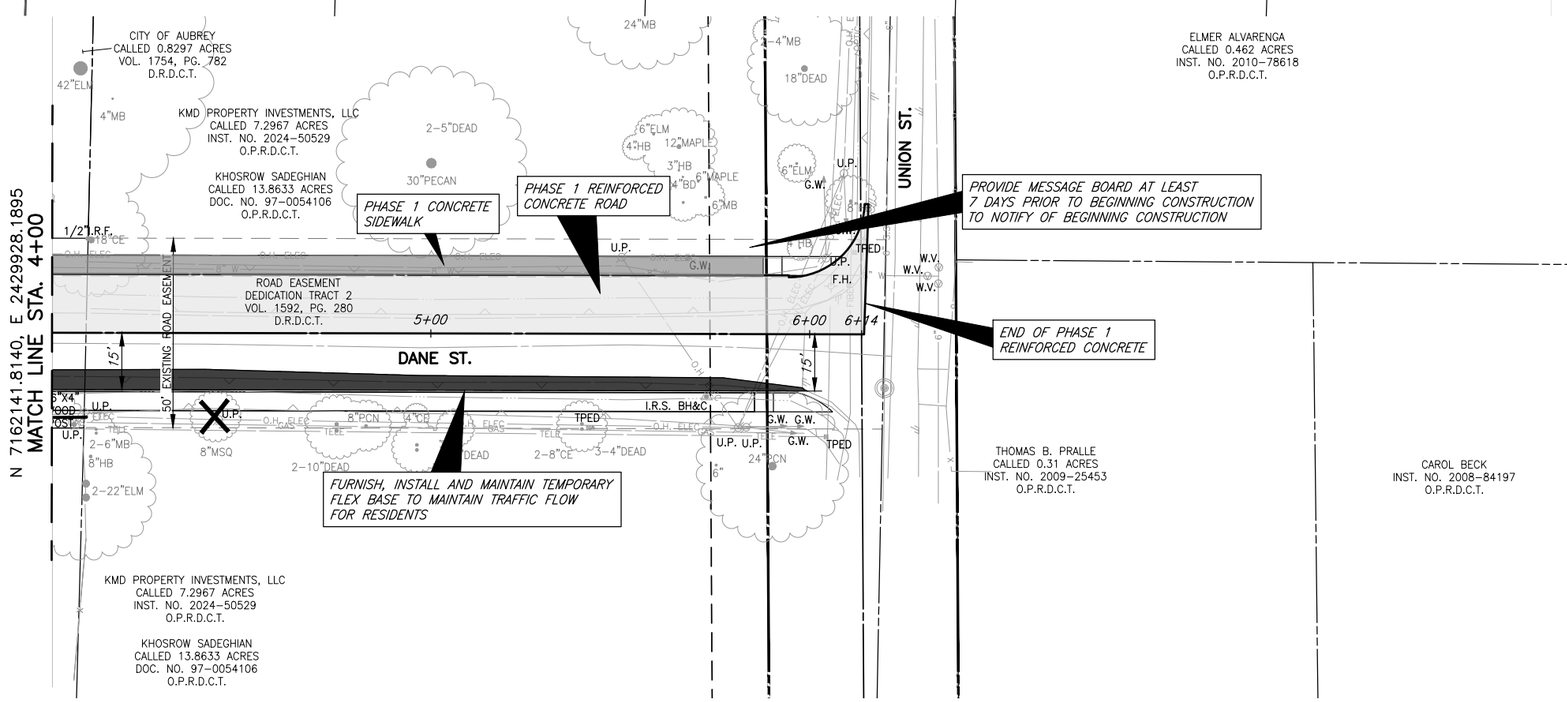

0 20 40 60
HORIZONTAL SCALE IN FEET

These plans and related specifications were prepared for construction of this specific project only. Reuse of these documents is not permitted without written authorization of Birkhoff, Hendricks & Carter, L.L.P. If this drawing is converted to an electronic file, if any discrepancy occurs between the electronic file and the Birkhoff, Hendricks & Carter, L.L.P. original document, the original document will govern in all cases.

BIRKHOFF, HENDRICKS & CARTER, L.L.P.
PROFESSIONAL ENGINEERS
TBPE Firm No. 526; TBPLS Firm No. 10031800
11910 Greenville Ave., Suite 600
Dallas, Texas 75243 (214) 361-7900

STATE OF TEXAS
JOE RICHARD CARTER
64008
REGISTERED PROFESSIONAL ENGINEER

3/25/2025

CITY OF AUBREY, TEXAS

DANE STREET IMPROVEMENTS AND CITY HALL PARKING IMPROVEMENTS

DANE STREET SUGGESTED SEQUENCE OF CONSTRUCTION
PHASE 1

BHC PROJECT NO. 2024-134

March, 2025

SHEET NO. **4**

REVISED: 3/28/25 – TBOOS H:\Projects\Aubrey\2024134 Dane Street P&D\Sheets\2024134 Dane Street Phase 1.dwg PLOT SCALE: 1:2 PLOT STYLE: 11x17.ctb PLOTTED BY: TRISTAN BOOS ON 3/28/2025

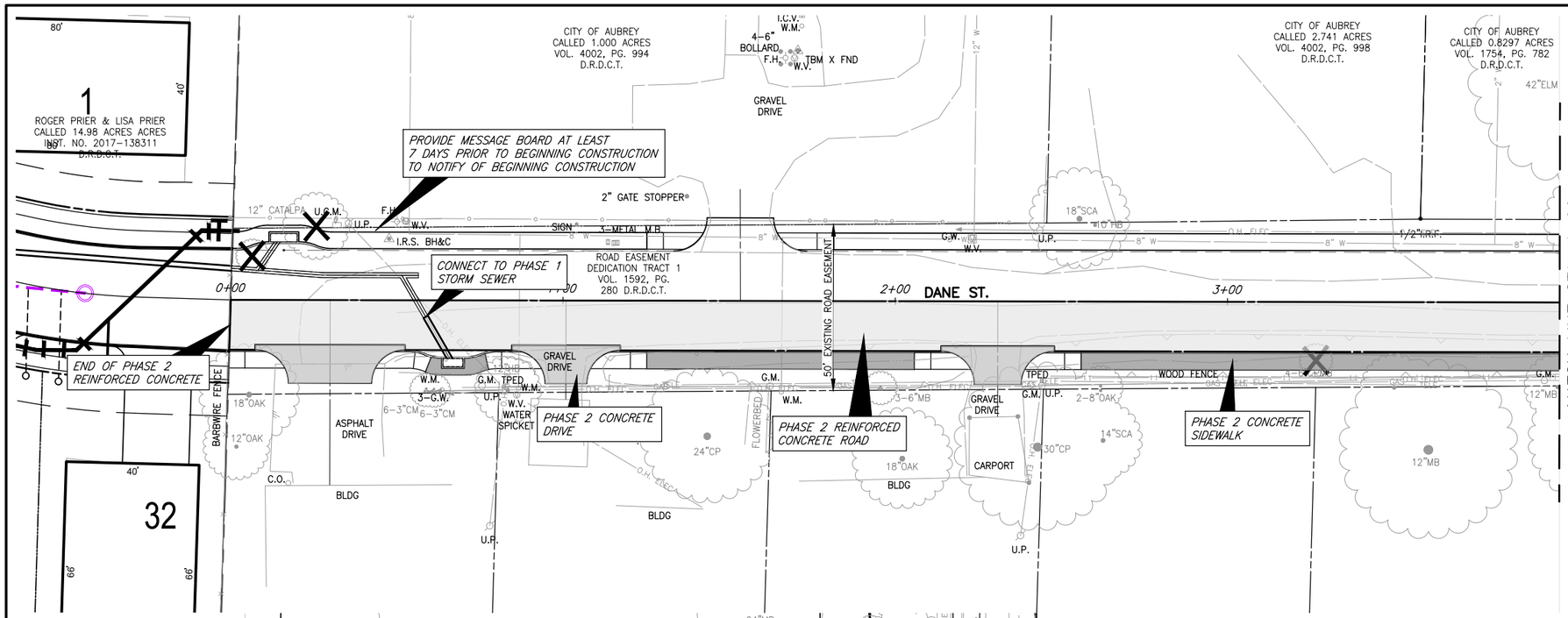

TRAFFIC CONTROL NOTES

1. REFER TO TRAFFIC CONTROL NOTES WITH GENERAL PROJECT NOTES ON SHEET 2.
2. CONTRACTOR SHALL PROVIDE FLAGMEN AND OTHER DEVICES AS REQUIRED TO MAINTAIN A MINIMUM OF ONE CLEAR 11-FT WIDE LANE OF TRAFFIC THROUGHOUT CONSTRUCTION. ALTERNATIVELY CONTRACTOR MAY PROVIDE A MINIMUM (2) 11-FT WIDE LANES WITHOUT FLAGMEN IF APPROVED FOR PHASE 1 CONSTRUCTION.
3. FLAGMEN WILL BE REQUIRED TO FINISH CONSTRUCTION OF THE CONCRETE PAVEMENT FOR PHASE 2.

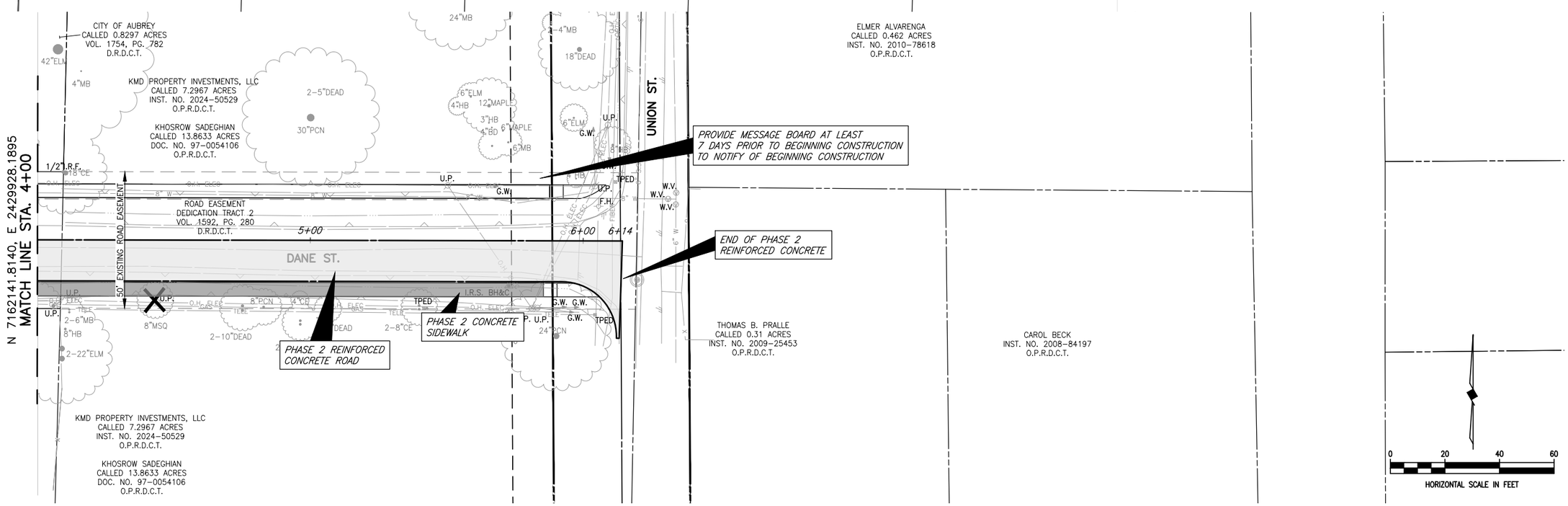

These plans and related specifications were prepared for construction of this specific project only. Reuse of these documents is not permitted without written authorization of Birkhoff, Hendricks & Carter, L.L.P. If this drawing is converted to an electronic file, if any discrepancy occurs between the electronic file and the Birkhoff, Hendricks & Carter, L.L.P. original document, the original document will govern in all cases.

BIRKHOFF, HENDRICKS & CARTER, L.L.P.
PROFESSIONAL ENGINEERS
TBPE Firm No. 526; TBPLS Firm No. 10031800
11910 Greenville Ave., Suite 600
Dallas, Texas 75243 (214) 361-7900

STATE OF TEXAS
JOE RICHARD CARTER
64008
REGISTERED
PROFESSIONAL ENGINEER

3/25/2025

CITY OF AUBREY, TEXAS
DANE STREET IMPROVEMENTS AND CITY HALL PARKING IMPROVEMENTS

DANE STREET SUGGESTED SEQUENCE OF CONSTRUCTION
PHASE 2

BHC PROJECT NO. 2024-134

March, 2025

SHEET NO. **5**

REVISED: 3/28/25 – TBOOS H:\Projects\Aubrey\2024134 Dane Street P&D\Sheets\2024134 Dane Street Phase 2.dwg PLOT SCALE: 1:2 PLOT STYLE: 11x17.ctb PLOTTED BY: TRISTAN BOOS ON 3/28/2025

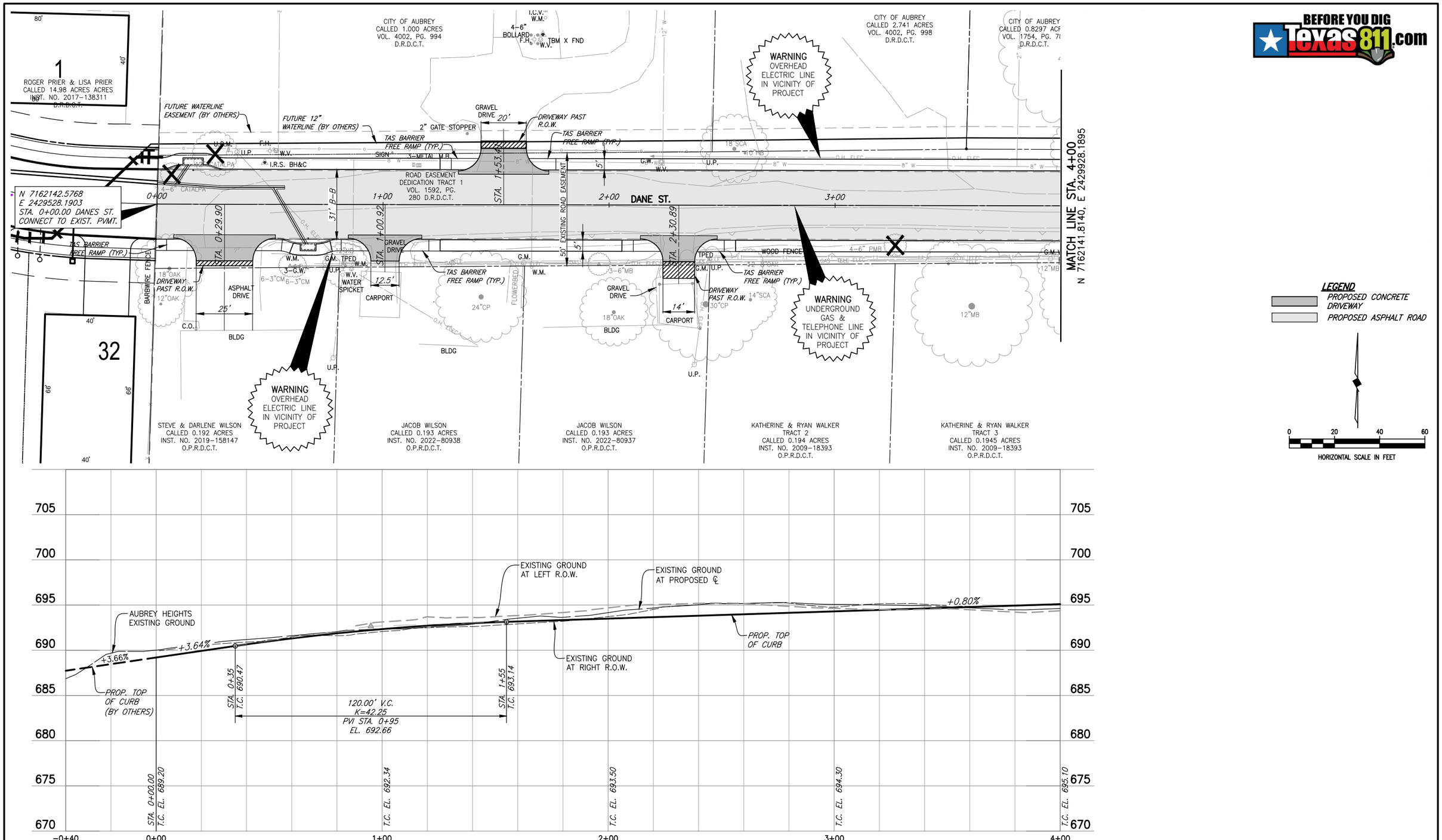

These plans and related specifications were prepared for construction of this specific project only. Reuse of these documents is not permitted without written authorization of Birkhoff, Hendricks & Carter, L.L.P. If this drawing is converted to an electronic file, if any discrepancy occurs between the electronic file and the Birkhoff, Hendricks & Carter, L.L.P. original document, the original document will govern in all cases.

BIRKHOFF, HENDRICKS & CARTER, L.L.P.
PROFESSIONAL ENGINEERS
TBPE Firm No. 526; TBPLS Firm No. 10031800
11910 Greenville Ave., Suite 600
Dallas, Texas 75243 (214) 361-7900

STATE OF TEXAS — JOE RICHARD CARTER — 64008 — REGISTERED PROFESSIONAL ENGINEER

3/25/2025

CITY OF AUBREY, TEXAS

DANE STREET IMPROVEMENTS AND CITY HALL PARKING IMPROVEMENTS

PAVING PLAN & PROFILE
STA. 0+00 TO STA. 4+00

BHC PROJECT NO. 2024-134

March, 2025

SHEET NO. **6**

REVISED: 3/28/25 – TBOOS H:\Projects\Aubrey\2024134 Dane Street P&D\Sheets\2024134 Pave P&P01.dwg PLOT SCALE: 1:2 PLOT STYLE: 11x17.ctb PLOTTED BY: TRISTAN BOOS ON 3/28/2025

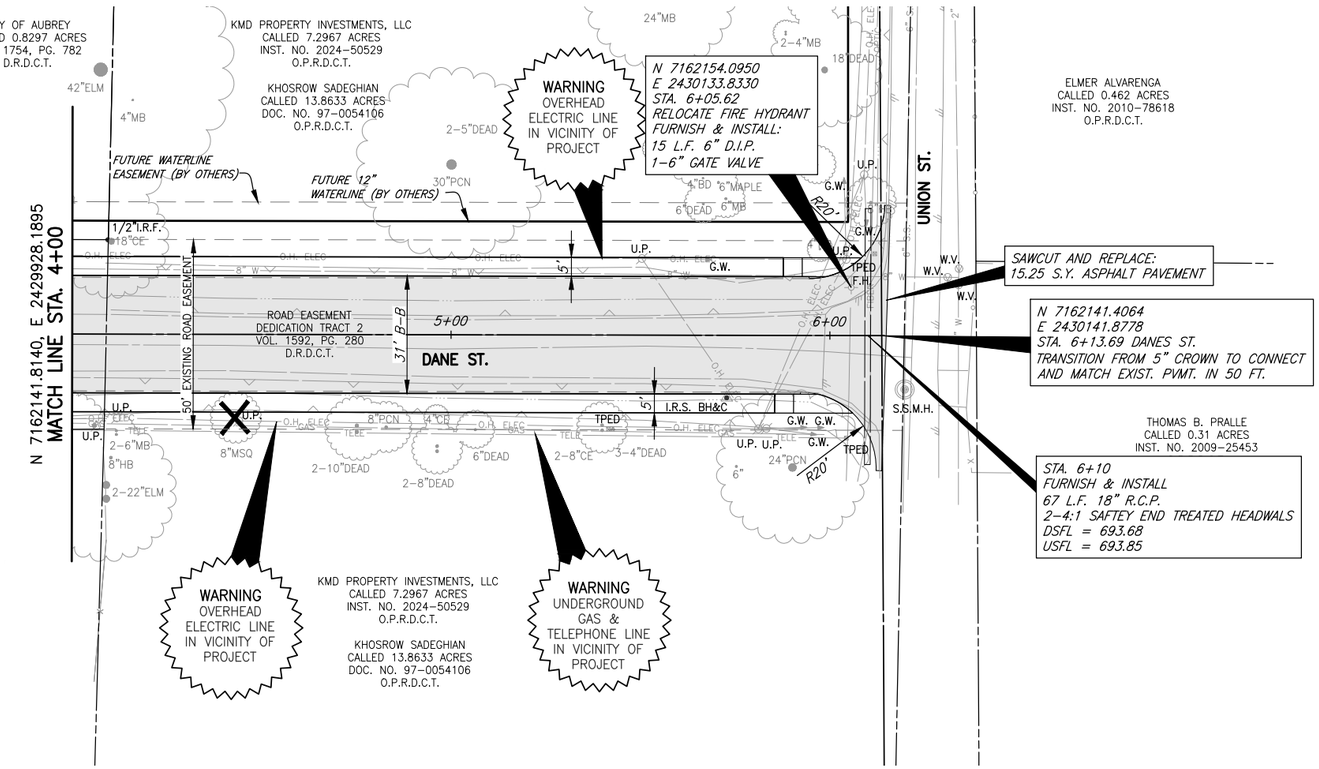

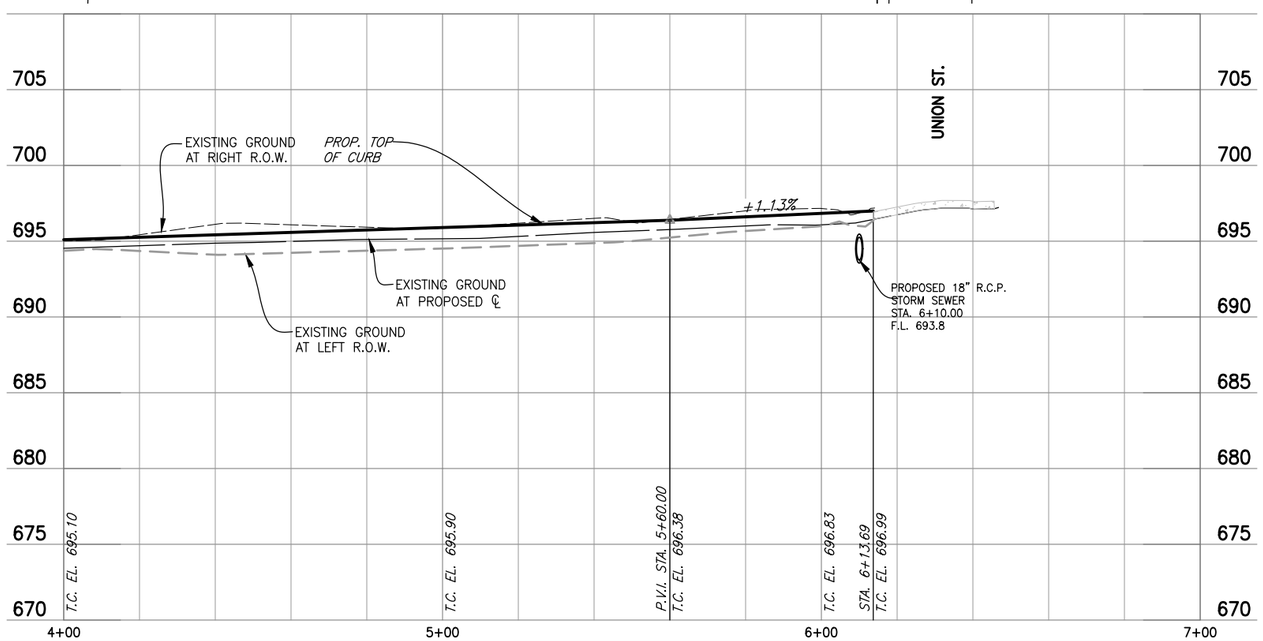

LEGEND

- PROPOSED CONCRETE DRIVEWAY
- PROPOSED ASPHALT ROAD

0 20 40 60

HORIZONTAL SCALE IN FEET

These plans and related specifications were prepared for construction of this specific project only. Reuse of these documents is not permitted without written authorization of Birkhoff, Hendricks & Carter, L.L.P. If this drawing is converted to an electronic file, if any discrepancy occurs between the electronic file and the Birkhoff, Hendricks & Carter, L.L.P. original document, the original document will govern in all cases.

BIRKHOFF, HENDRICKS & CARTER, L.L.P.
PROFESSIONAL ENGINEERS
TBPE Firm No. 526; TBPLS Firm No. 10031800
11910 Greenville Ave., Suite 600
Dallas, Texas 75243 (214) 361-7900

STATE OF TEXAS
JOE RICHARD CARTER
64008
REGISTERED PROFESSIONAL ENGINEER

3/25/2025

CITY OF AUBREY, TEXAS

DANE STREET IMPROVEMENTS AND CITY HALL PARKING IMPROVEMENTS

PAVING PLAN & PROFILE
STA. 4+00 TO STA. 6+13.69

BHC PROJECT NO. 2024-134

March, 2025

SHEET NO. 7

REVISED: 3/31/25 – TBOOS H:\Projects\Aubrey\2024134 Dane Street P&D\Sheets\2024134 Pave P&P02.dwg PLOT SCALE: 1:2 PLOT STYLE: 11x17.ctb PLOTTED BY: TRISTAN BOOS ON 3/31/2025

0+29.90

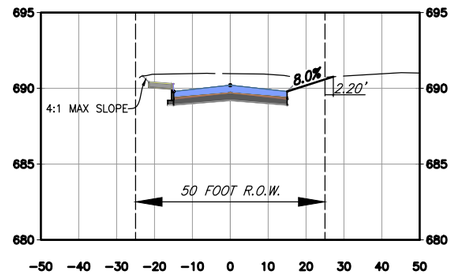

3+05.79

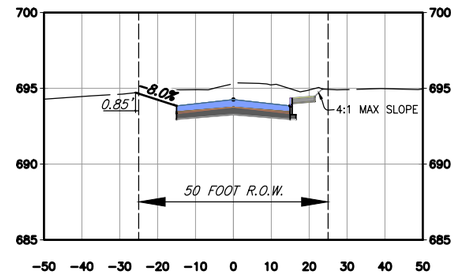

1+00.92

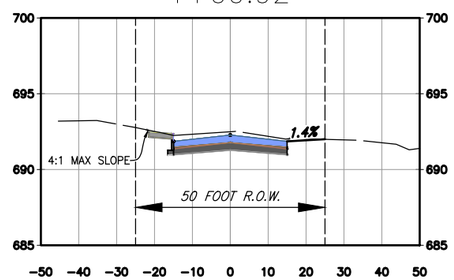

1+53.41

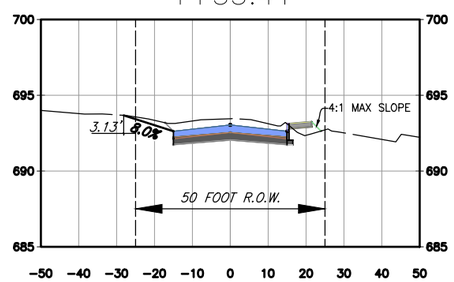

2+30.89

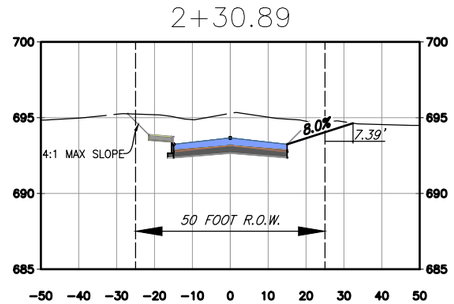

These plans and related specifications were prepared for construction of this specific project only. Reuse of these documents is not permitted without written authorization of Birkhoff, Hendricks & Carter, L.L.P. If this drawing is converted to an electronic file, if any discrepancy occurs between the electronic file and the Birkhoff, Hendricks & Carter, L.L.P. original document, the original document will govern in all cases.

BIRKHOFF, HENDRICKS & CARTER, L.L.P.
PROFESSIONAL ENGINEERS
TBPE Firm No. 526; TBPLS Firm No. 10031800
11910 Greenville Ave., Suite 600
Dallas, Texas 75243 (214) 361-7900

STATE OF TEXAS
JOE RICHARD CARTER
64008
REGISTERED PROFESSIONAL ENGINEER

3/25/2025

CITY OF AUBREY, TEXAS
DANE STREET IMPROVEMENTS AND CITY HALL PARKING IMPROVEMENTS

DANE STREET DRIVEWAY PROFILES

BHC PROJECT NO. 2024-134

March, 2025

SHEET NO. **8**

0+02.00

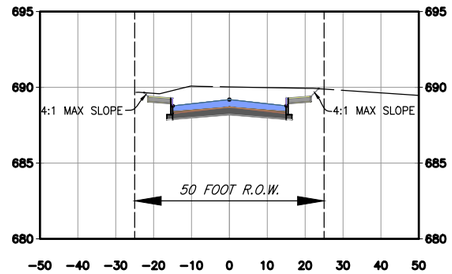

1+00.00

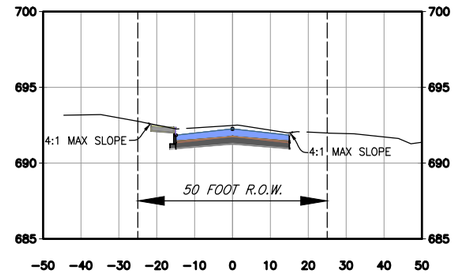

2+00.00

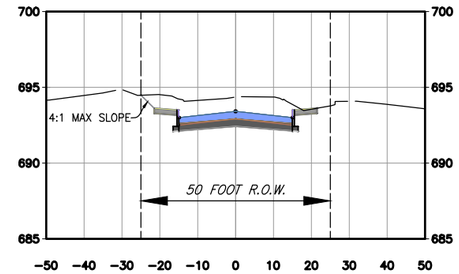

3+00.00

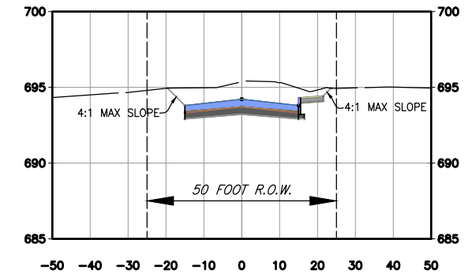

0+25.00

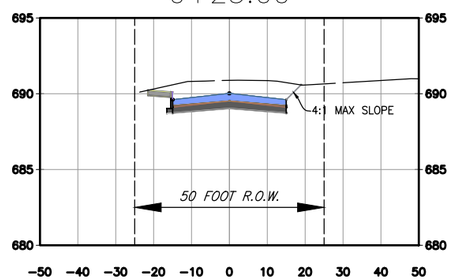

1+25.00

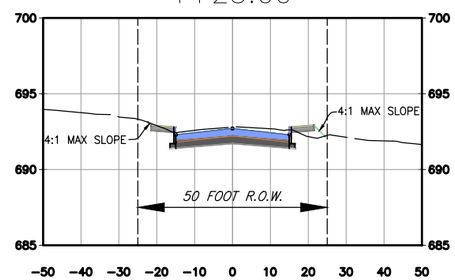

2+25.00

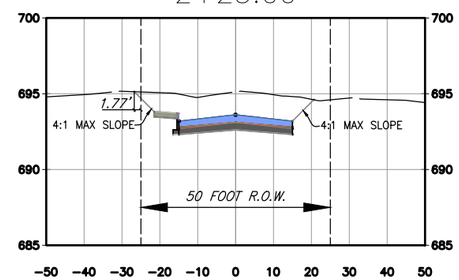

3+25.00

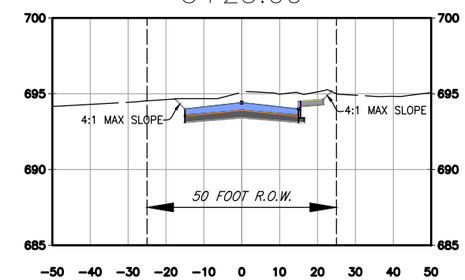

0+50.00

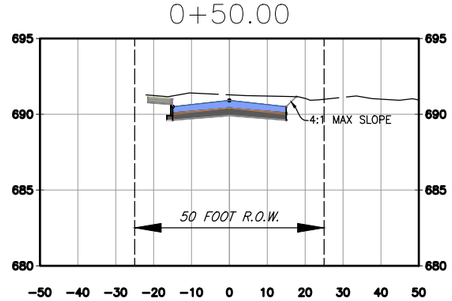

1+50.00

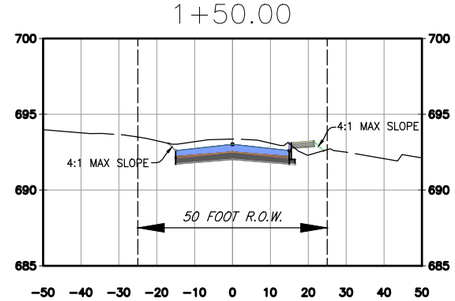

2+50.00

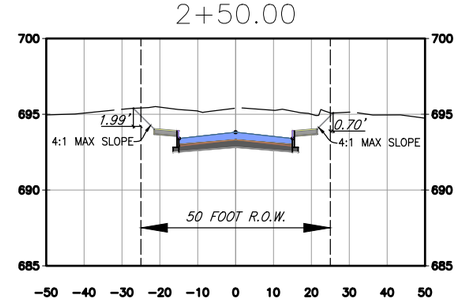

3+50.00

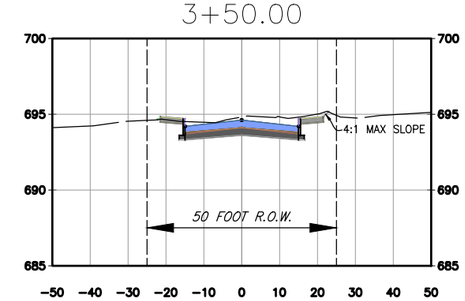

0+75.00

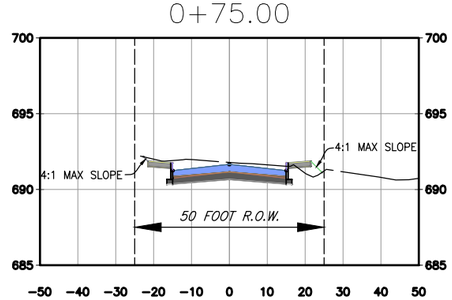

1+75.00

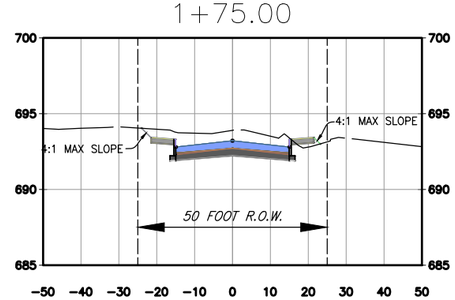

2+75.00

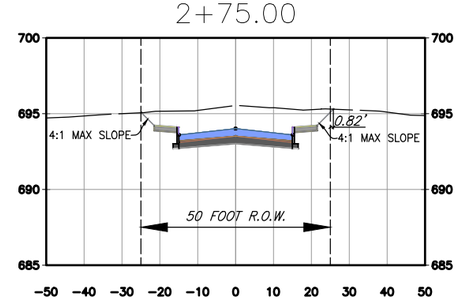

3+75.00

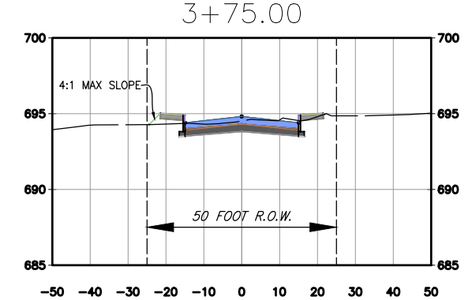

These plans and related specifications were prepared for construction of this specific project only. Reuse of these documents is not permitted without written authorization of Birkhoff, Hendricks & Carter, L.L.P. If this drawing is converted to an electronic file, if any discrepancy occurs between the electronic file and the Birkhoff, Hendricks & Carter, L.L.P. original document, the original document will govern in all cases.

BIRKHOFF, HENDRICKS & CARTER, L.L.P.
PROFESSIONAL ENGINEERS
TBPE Firm No. 526; TBPLS Firm No. 10031800
11910 Greenville Ave., Suite 600
Dallas, Texas 75243 (214) 361-7900

STATE OF TEXAS
JOE RICHARD CARTER
64008
REGISTERED PROFESSIONAL ENGINEER

3/25/2025

CITY OF AUBREY, TEXAS
DANE STREET IMPROVEMENTS AND CITY HALL PARKING IMPROVEMENTS

DANE STREET CROSS SECTIONS 1

BHC PROJECT NO. 2024-134

March, 2025

SHEET NO. **9**

4+00.00

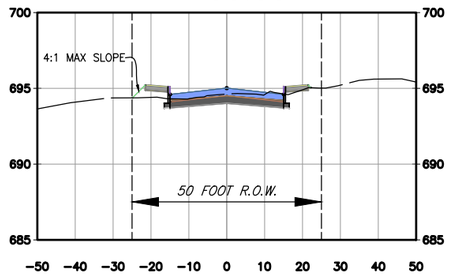

5+00.00

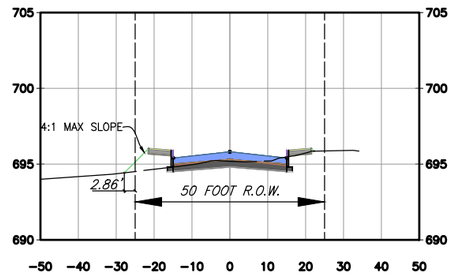

6+00.00

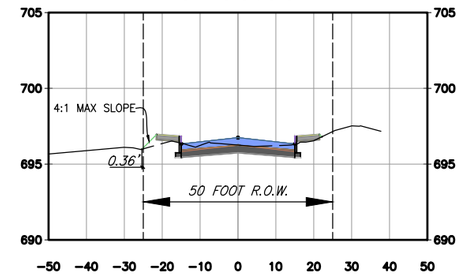

4+25.00

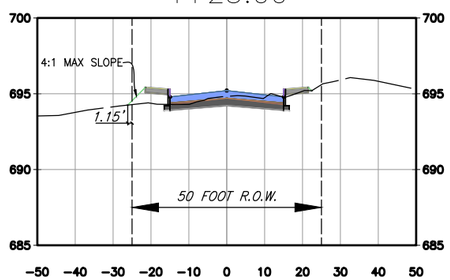

5+25.00

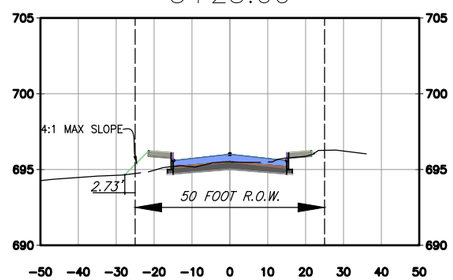

4+50.00

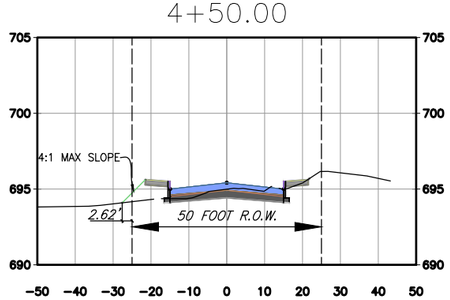

5+50.00

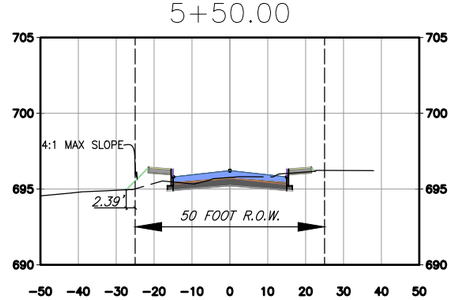

4+75.00

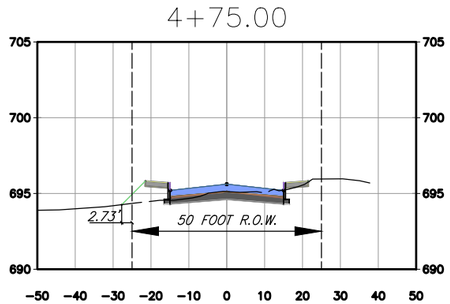

5+75.00

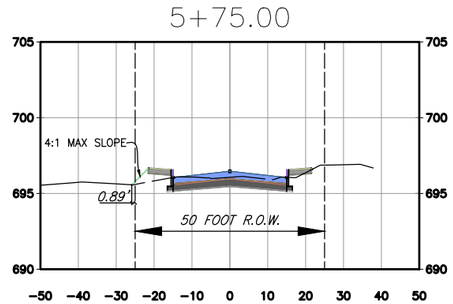

These plans and related specifications were prepared for construction of this specific project only. Reuse of these documents is not permitted without written authorization of Birkhoff, Hendricks & Carter, L.L.P. If this drawing is converted to an electronic file, if any discrepancy occurs between the electronic file and the Birkhoff, Hendricks & Carter, L.L.P. original document, the original document will govern in all cases.

BIRKHOFF, HENDRICKS & CARTER, L.L.P.
PROFESSIONAL ENGINEERS
TBPE Firm No. 526; TBPLS Firm No. 10031800
11910 Greenville Ave., Suite 600
Dallas, Texas 75243 (214) 361-7900

STATE OF TEXAS
JOE RICHARD CARTER
64008
REGISTERED PROFESSIONAL ENGINEER

3/25/2025

CITY OF AUBREY, TEXAS
DANE STREET IMPROVEMENTS AND CITY HALL PARKING IMPROVEMENTS

DANE STREET CROSS SECTIONS 2

BHC PROJECT NO. 2024-134

March, 2025

SHEET NO. **10**

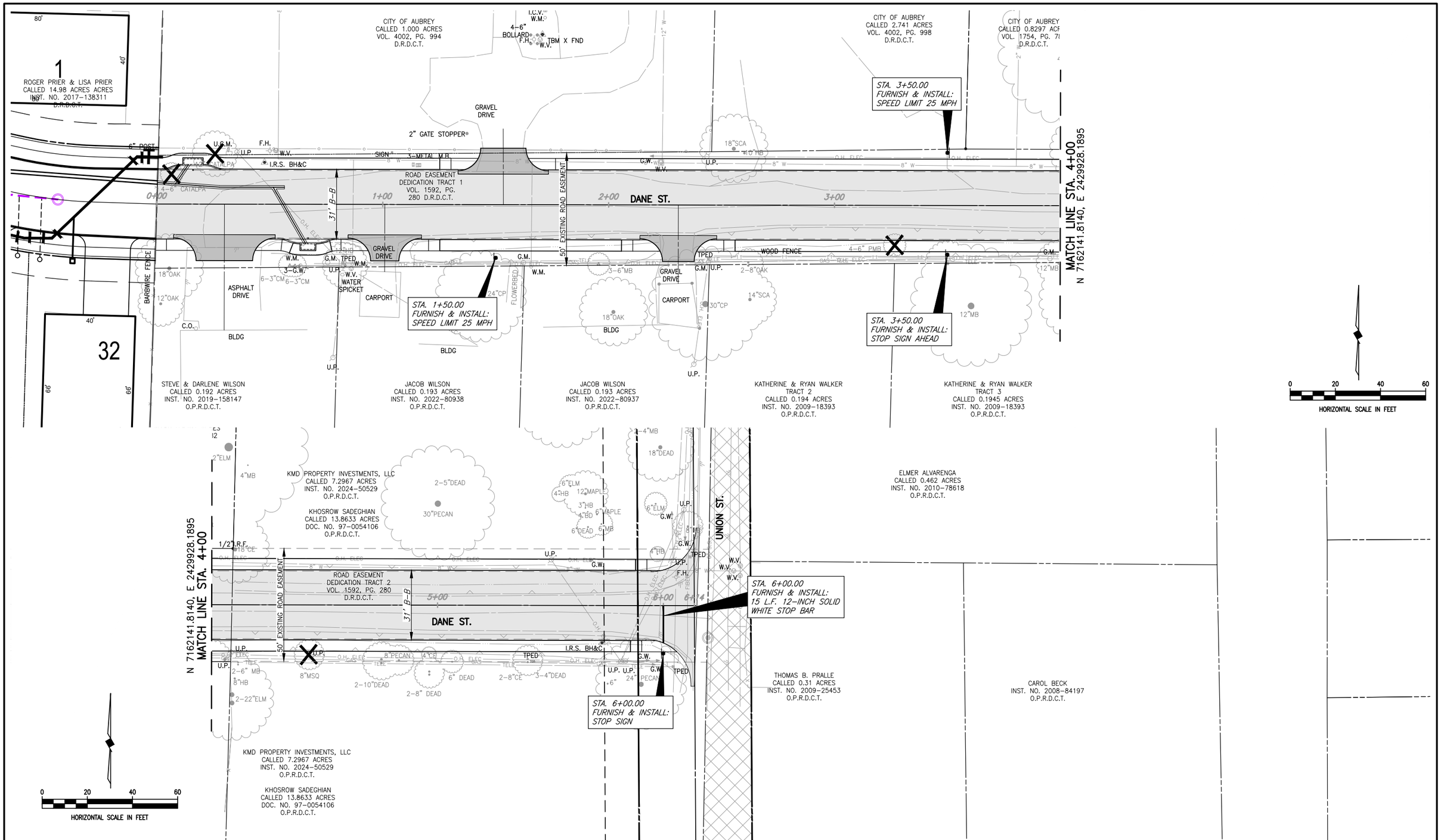

These plans and related specifications were prepared for construction of this specific project only. Reuse of these documents is not permitted without written authorization of Birkhoff, Hendricks & Carter, L.L.P. If this drawing is converted to an electronic file, if any discrepancy occurs between the electronic file and the Birkhoff, Hendricks & Carter, L.L.P. original document, the original document will govern in all cases.

BIRKHOFF, HENDRICKS & CARTER, L.L.P.
PROFESSIONAL ENGINEERS
TBPE Firm No. 526; TBPLS Firm No. 10031800
11910 Greenville Ave., Suite 600
Dallas, Texas 75243 (214) 361-7900

STATE OF TEXAS
JOE RICHARD CARTER
64008
REGISTERED PROFESSIONAL ENGINEER

3/25/2025

CITY OF AUBREY, TEXAS
DANE STREET IMPROVEMENTS AND CITY HALL PARKING IMPROVEMENTS

DANE STREET
PAVEMENT MARKING AND SIGNAGE

BHC PROJECT NO. 2024-134

March, 2025

SHEET NO. **11**

REVISED: 3/28/25 – TBOOS H:\Projects\Aubrey\2024134 Dane Street P&D\Sheets\2024134 Markings and Signage.dwg PLOT SCALE: 1:2 PLOT STYLE: 11x17.ctb PLOTTED BY: TRISTAN BOOS ON 3/28/2025

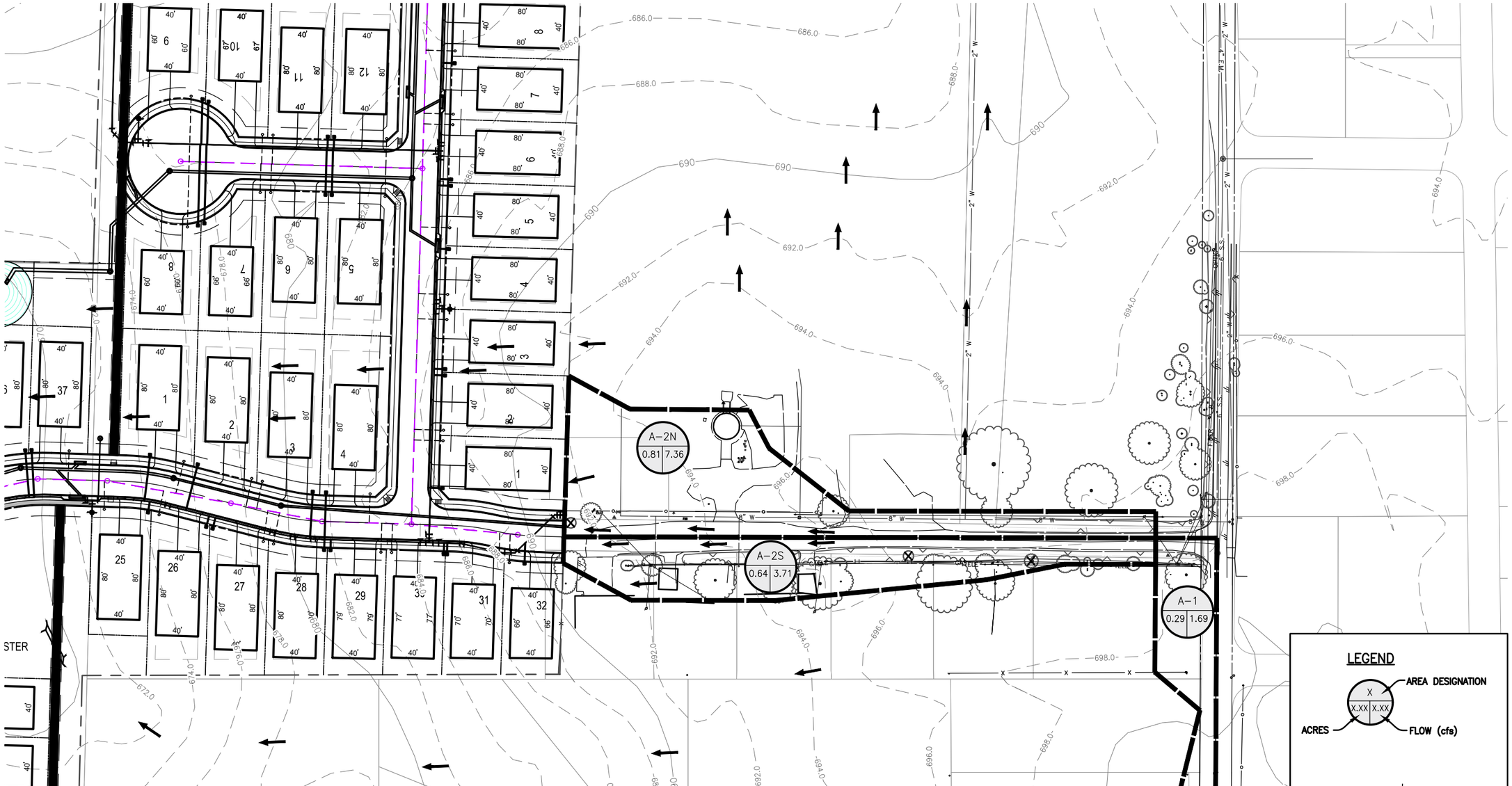

Incremental Drainage Area												
Area. No.	Inlet Size	Total Area (Ac.)	ROW Area 0.90	Residential Area 0.60	Open Area 0.35	Effective Runoff "C"	Incremental "CA"	Accumulated "CA"	Time of Concentration (Min.)	Design Storm Frequency (Yrs.)	Intensity (I) (In./Hr.)	Total Flow (Q) (c.f.s.)
1	2	3	4	5	6	7	8	9	10	11	12	13
Name												
A-1	None	0.289	0.134	0.155	0.000	0.739	0.213	0.213	15.00	100	7.91	1.69
A-2N	To Aubrey Heights	0.812	0.322	0.490	0.000	0.719	0.584	0.584	10.00	100	9.24	5.39
A-2S	To Aubrey Heights	0.642	0.322	0.000	0.320	0.626	0.402	0.402	10.00	100	9.24	3.71

These plans and related specifications were prepared for construction of this specific project only. Reuse of these documents is not permitted without written authorization of Birkhoff, Hendricks & Carter, L.L.P. If this drawing is converted to an electronic file, if any discrepancy occurs between the electronic file and the Birkhoff, Hendricks & Carter, L.L.P. original document, the original document will govern in all cases.

BIRKHOFF, HENDRICKS & CARTER, L.L.P.
PROFESSIONAL ENGINEERS
TBPE Firm No. 526; TBPLS Firm No. 10031800
11910 Greenville Ave., Suite 600
Dallas, Texas 75243 (214) 361-7900

STATE OF TEXAS
JOE RICHARD CARTER
64008
REGISTERED PROFESSIONAL ENGINEER

Joe Richard Carter
3/25/2025

CITY OF AUBREY, TEXAS

DANE STREET IMPROVEMENTS AND CITY HALL PARKING IMPROVEMENTS

OVERALL EXISTING DRAINAGE AREA MAP

BHC PROJECT NO. 2024-134

March, 2025

SHEET NO. **12**

REVISED: 3/28/25 – TBOOS H:\Projects\Aubrey\2024134 Dane Street P&D\Basedwgs\Exist DA Map.dwg PLOT SCALE: 1:2 PLOT STYLE: 11x17.ctb PLOTTED BY: TRISTAN BOOS ON 3/28/2025

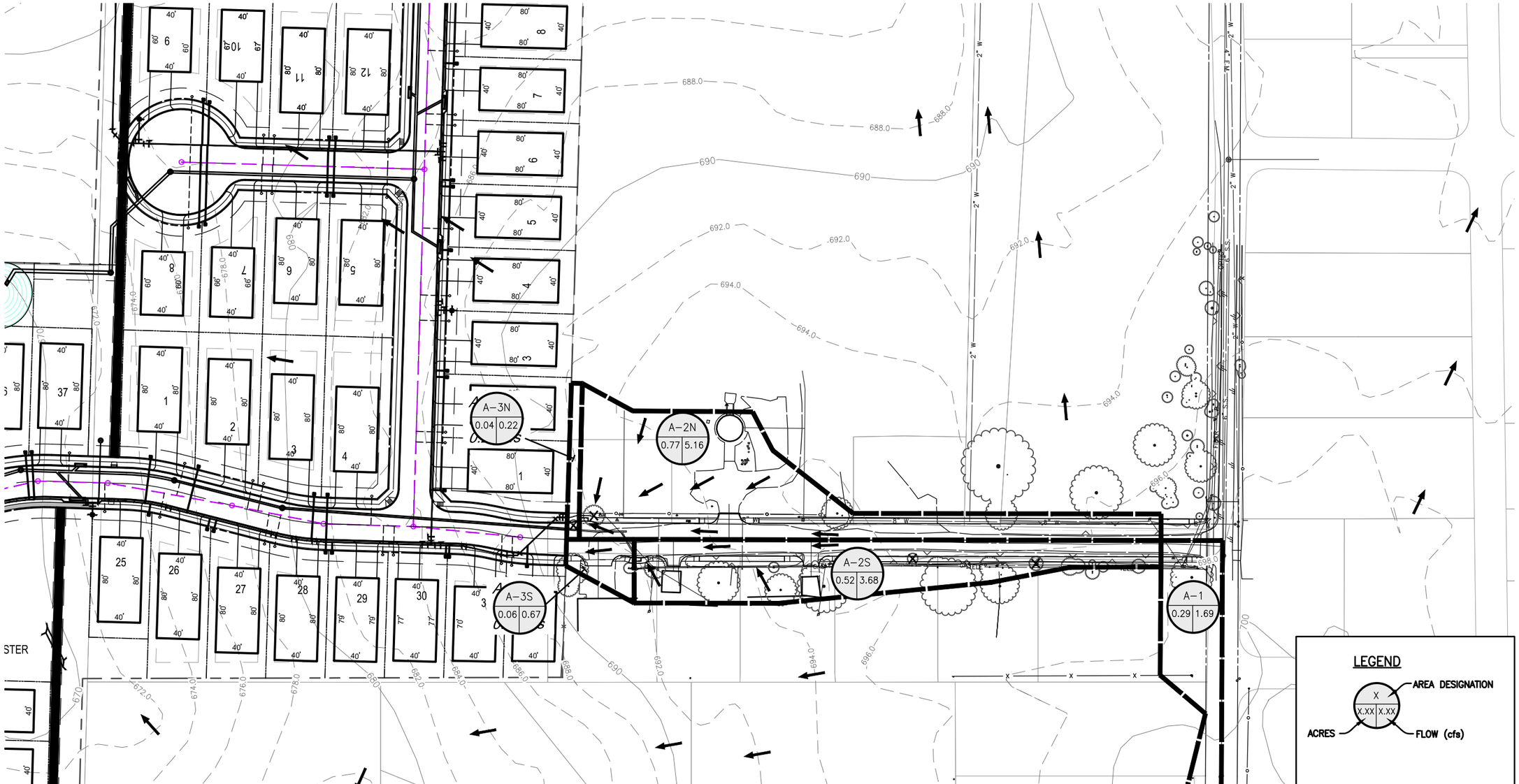

Incremental Drainage Area												
Area. No.	Inlet Size	Total Area (Ac.)	ROW Area 0.90	Residential Area 0.60	Open Area 0.35	Effective Runoff "C"	Incremental "CA"	Accumulated "CA"	Inlet Time of Concentration (Min.)	Design Storm Frequency (Yrs.)	Intensity (I) (In./Hr.)	Total Flow (Q) (c.f.s.)
1	2	3	4	5	6	7	8	9	10	11	12	13
Name												
A-1	18" Culvert	0.289	0.134	0.155	0.000	0.739	0.213	0.213	15.00	100	7.91	1.69
A-2N	8' Recessed	0.774	0.315	0.458	0.000	0.722	0.559	0.559	10.00	100	9.24	5.16
A-2S	6' Recessed	0.520	0.285	0.235	0.000	0.764	0.398	0.398	10.00	100	9.24	3.68
A-3N	To Aubrey Heights North	0.037	0.007	0.030	0.000	0.653	0.024	0.024	10.00	100	9.24	0.22
A-3S	To Aubrey Heights South	0.063	0.037	0.026	0.000	0.775	0.049	0.073	10.00	100	9.24	0.67

These plans and related specifications were prepared for construction of this specific project only. Reuse of these documents is not permitted without written authorization of Birkhoff, Hendricks & Carter, L.L.P. If this drawing is converted to an electronic file, if any discrepancy occurs between the electronic file and the Birkhoff, Hendricks & Carter, L.L.P. original document, the original document will govern in all cases.

BIRKHOFF, HENDRICKS & CARTER, L.L.P.
PROFESSIONAL ENGINEERS
TBPE Firm No. 526; TBPLS Firm No. 10031800
11910 Greenville Ave., Suite 600
Dallas, Texas 75243 (214) 361-7900

STATE OF TEXAS
JOE RICHARD CARTER
64008
REGISTERED PROFESSIONAL ENGINEER

Joe Richard Carter
3/25/2025

CITY OF AUBREY, TEXAS

DANE STREET IMPROVEMENTS AND CITY HALL PARKING IMPROVEMENTS

OVERALL PROPOSED DRAINAGE AREA MAP

BHC PROJECT NO. 2024-134

March, 2025

SHEET NO. **13**

REVISED: 3/28/25 – TBOOS H:\Projects\Aubrey\2024134 Dane Street P&D\Basedwgs\Prop DA Map.dwg PLOT SCALE: 1:2 PLOT STYLE: 11x17.ctb PLOTTED BY: TRISTAN BOOS ON 3/28/2025

Runoff Collection Point			Distance		Incremental Drainage Area				Time of Concentration (Min.)			Design			Slope of	No		Velocity	Head	Velocity	Flow Time	Time at	Design	Design
Storm Sewer ID	Upstream Station	Downstream Station	Between Collection Points	Area. No.	Drainage Area (Ac.)	Effective Runoff Coeff. ("C")	Increm-ental "CA"	Accum-ulated "CA"	Inlet Time (Min.)	Along Sewer Line (Min.)	Used in Design (Min.)	Storm Freq. (Yrs.)	Intensity (I) (In./Hr.)	Runoff (Q) (c.f.s.)	Hydraulic Gradient (Ft./Ft.)	of Pipes	Selected Diameter (In.)	Between Points (f.p.s.)	Loss Coeff. "K"	Head Loss Upstream (Feet)	Distance/ (Vel*60) (Min.)	Downstream Station (Min.)	Slope (Ft./Ft.)	Capacity (c.f.s.)
1	2	3	4	5	6	7	8	9	10	11	12	13	14	15	16	17	18	19	20	21	22	23	24	25
Name																								
	51.26	7.86	43.40	A-2S	0.52	0.764	0.398	0.398	10.00	0.00	10.00	100	9.24	3.68	0.0012	1	18	2.08	0.60	0.07	0.35	10.35	0.0100	10.51
	7.86	0.00	7.86	A-2N	0.77	0.722	0.559	0.957	10.00	0.35	10.35	100	9.13	8.73	0.0069	1	18	4.94	0.60	0.34	0.03	10.37	0.0120	11.51

Runoff Calculations															Gutter Capacity Calculations					Curb Inlet Calculations (Type I)									Drop Inlet Calculations			
Inlet Number	Area No.	Approx. Centerline Station	ROW Area (Ac.) 0.90	Residential Area (Ac.) 0.60	Open Area (Ac.) 0.35	Effective Runoff Coeff. "C"	Increm-ental "CA"	* Accum-ulated "CA"	Time Upstr. Sta. (Min.)	Design Storm Freq. (Yrs.)	Intensity (I) (In./Hr.)	Flow "Q" (c.f.s.)	Carry Over (c.f.s.)	Total Flow "Qa" (c.f.s.)	Z 2% xslope (1/xslope)	Z/"n"	Gutter Slope "S" (ft./ft.)	Y (ft.)	Ponded Width Y*Z (ft)	a (ft.)	qL (c.f.s.)	Minimum Length Required Lr (ft.)	Length Supplied La (ft.)	La/Lr	a/Y	Q/Qa	Q= Qa*(Q/Qa)	Carryover (c.f.s.)	Head at Throat	Inlet Opening Length (ft.)	Carryover (c.f.s.)	Remarks
	A-1		0.13	0.16	0.00	0.74	0.213	0.213	15.00	100	7.91	1.69	0.00	1.69	45.5	2674	0.0060	0.20	9.30	0.33	0.65	2.59	0.00	0.00	1.63	0.00	0.00	1.69	---	---	---	Flow to Prop. 18" RCPipe Culvert
	A-2N		0.32	0.46	0.00	0.72	0.559	0.559	10.00	100	9.24	5.16	0.00	5.16	45.5	2674	0.0434	0.21	9.76	0.33	0.66	7.78	8.00	1.03	1.55	1.03	5.31	0.00	---	---	---	8' Recessed Inlet
	A-2S		0.29	0.23	0.00	0.76	0.398	0.398	10.00	100	9.24	3.68	0.00	3.68	45.5	2674	0.0434	0.19	8.60	0.33	0.63	5.80	6.00	1.03	1.76	1.03	3.80	0.00	---	---	---	6' Recessed Inlet
	A-3N		0.01	0.03	0.00	0.65	0.024	0.024	10.00	100	9.24	0.22	0.00	0.22	45.5	2674	0.0325	0.07	3.17	0.33	0.50	0.44	0.00	0.00	4.78	0.00	0.00	0.22	---	---	---	To Inlets in Aubrey Heights
	A-3S		0.04	0.03	0.00	0.78	0.049	0.049	10.00	100	9.24	0.45	0.22	0.67	45.5	2674	0.0325	0.11	4.80	0.33	0.54	1.24	0.00	0.00	3.15	0.00	0.00	0.67	---	---	---	To Inlets in Aubrey Heights

These plans and related specifications were prepared for construction of this specific project only. Reuse of these documents is not permitted without written authorization of Birkhoff, Hendricks & Carter, L.L.P. If this drawing is converted to an electronic file, if any discrepancy occurs between the electronic file and the Birkhoff, Hendricks & Carter, L.L.P. original document, the original document will govern in all cases.

BIRKHOFF, HENDRICKS & CARTER, L.L.P.
PROFESSIONAL ENGINEERS
TBPE Firm No. 526; TBPLS Firm No. 10031800
11910 Greenville Ave., Suite 600
Dallas, Texas 75243 (214) 361-7900

STATE OF TEXAS
JOE RICHARD CARTER
64008
REGISTERED PROFESSIONAL ENGINEER

Joe Richard Carter
3/25/2025

CITY OF AUBREY, TEXAS
DANE STREET IMPROVEMENTS AND CITY HALL PARKING IMPROVEMENTS

STORM SEWER AND INLET CALCULATIONS

BHC PROJECT NO. 2024-134

March, 2025

SHEET NO. **14**

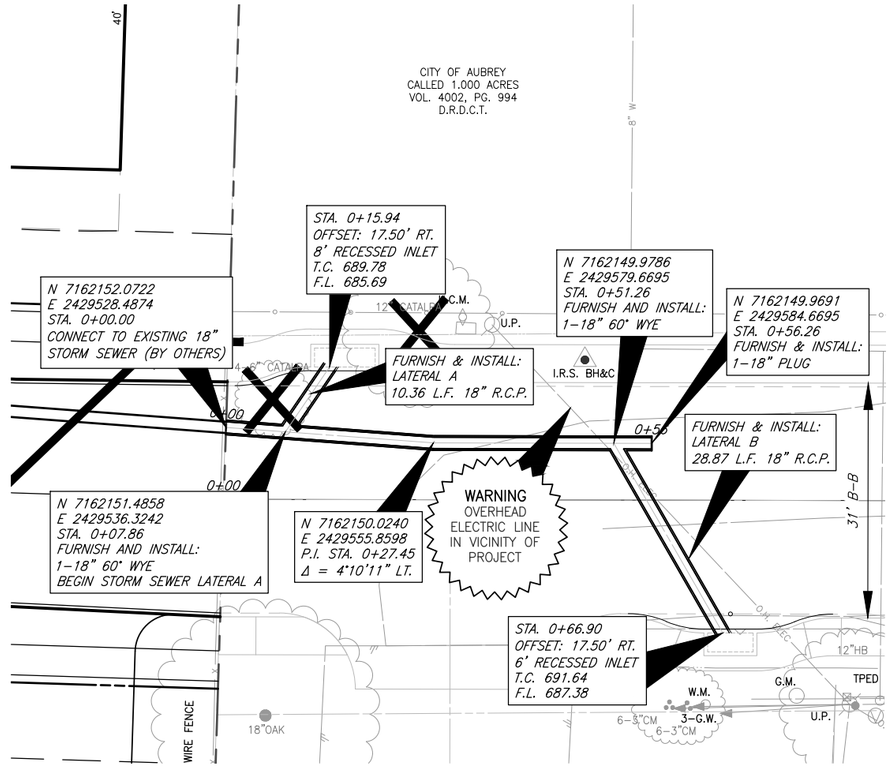

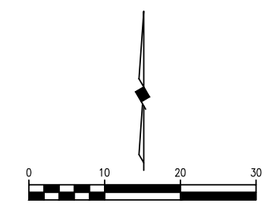

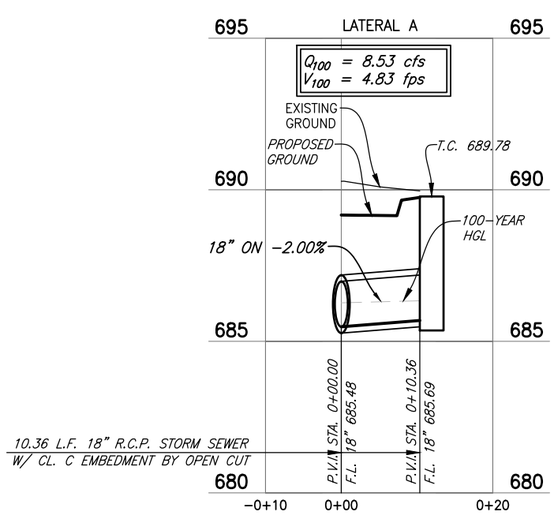

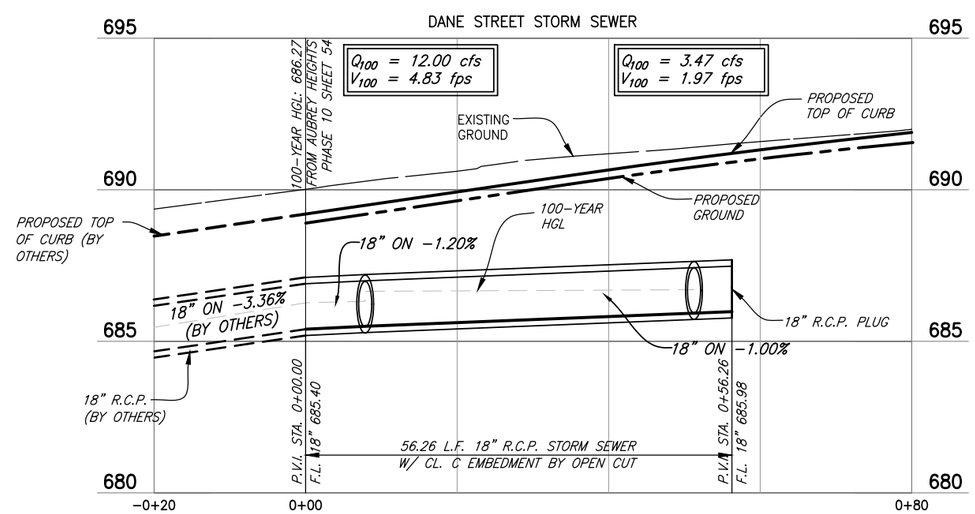

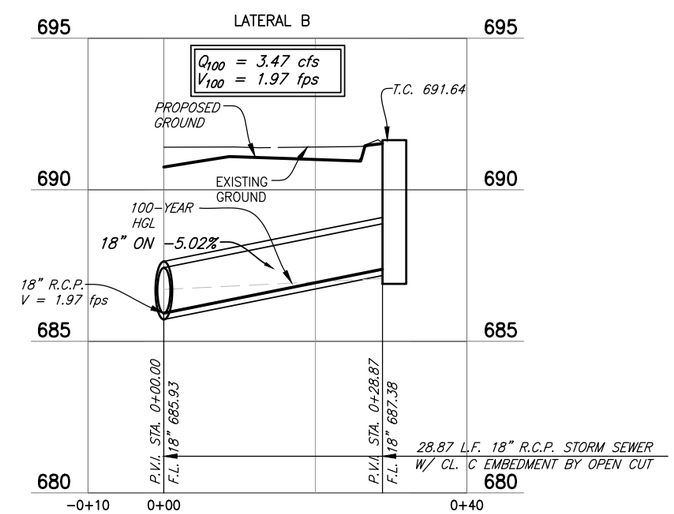

These plans and related specifications were prepared for construction of this specific project only. Reuse of these documents is not permitted without written authorization of Birkhoff, Hendricks & Carter, L.L.P. If this drawing is converted to an electronic file, if any discrepancy occurs between the electronic file and the Birkhoff, Hendricks & Carter, L.L.P. original document, the original document will govern in all cases.

BIRKHOFF, HENDRICKS & CARTER, L.L.P.
PROFESSIONAL ENGINEERS
TBPE Firm No. 526; TBPLS Firm No. 10031800
11910 Greenville Ave., Suite 600
Dallas, Texas 75243 (214) 361-7900

STATE OF TEXAS
JOE RICHARD CARTER
64008
REGISTERED PROFESSIONAL ENGINEER

Joe Richard Carter
3/25/2025

CITY OF AUBREY, TEXAS
DANE STREET IMPROVEMENTS AND CITY HALL PARKING IMPROVEMENTS

DANE STREET STORM SEWER PLAN AND PROFILE

BHC PROJECT NO. 2024-134

March, 2025

SHEET NO. **15**

REVISED: 3/28/25 – TBOOS H:\Projects\Aubrey\2024134 Dane Street P&D\Sheets\2024134 Storm Sewer Plan and Profile.dwg PLOT SCALE: 1:2 PLOT STYLE: 11x17.ctb PLOTTED BY: TRISTAN BOOS ON 3/28/2025

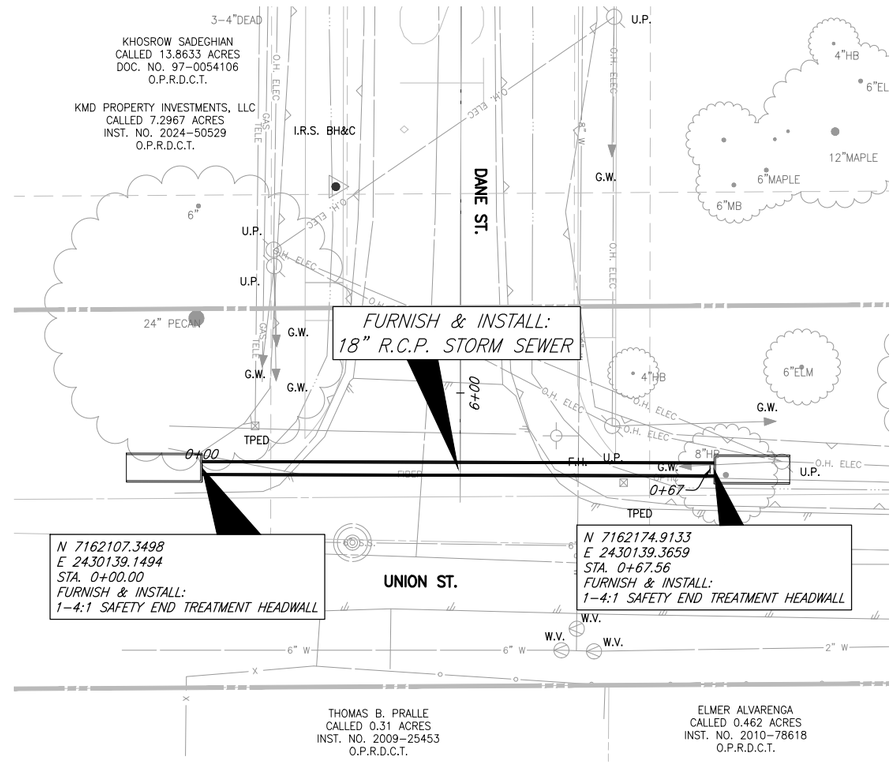

0 10 20 30
HORIZONTAL SCALE IN FEET

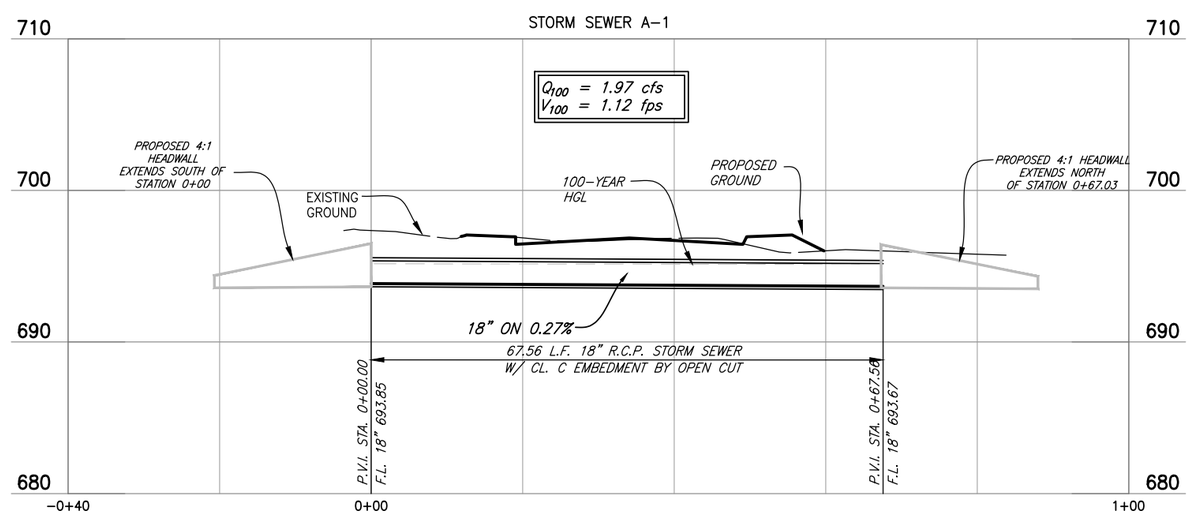

These plans and related specifications were prepared for construction of this specific project only. Reuse of these documents is not permitted without written authorization of Birkhoff, Hendricks & Carter, L.L.P. If this drawing is converted to an electronic file, if any discrepancy occurs between the electronic file and the Birkhoff, Hendricks & Carter, L.L.P. original document, the original document will govern in all cases.

BIRKHOFF, HENDRICKS & CARTER, L.L.P.
PROFESSIONAL ENGINEERS
TBPE Firm No. 526; TBPLS Firm No. 10031800
11910 Greenville Ave., Suite 600
Dallas, Texas 75243 (214) 361-7900

STATE OF TEXAS
JOE RICHARD CARTER
84008
REGISTERED PROFESSIONAL ENGINEER

3/25/2025

CITY OF AUBREY, TEXAS
DANE STREET IMPROVEMENTS AND CITY HALL PARKING IMPROVEMENTS

DANE STREET STORM SEWER PLAN AND PROFILE 2

BHC PROJECT NO. 2024-134

March, 2025

SHEET NO. **16**

REVISED: 3/31/25 – TBOOS H:\Projects\Aubrey\2024134 Dane Street P&D\Sheets\2024134 Storm Sewer Plan and Profile 2.dwg PLOT SCALE: 1:2 PLOT STYLE: 11x17.ctb PLOTTED BY: TRISTAN BOOS ON 3/31/2025

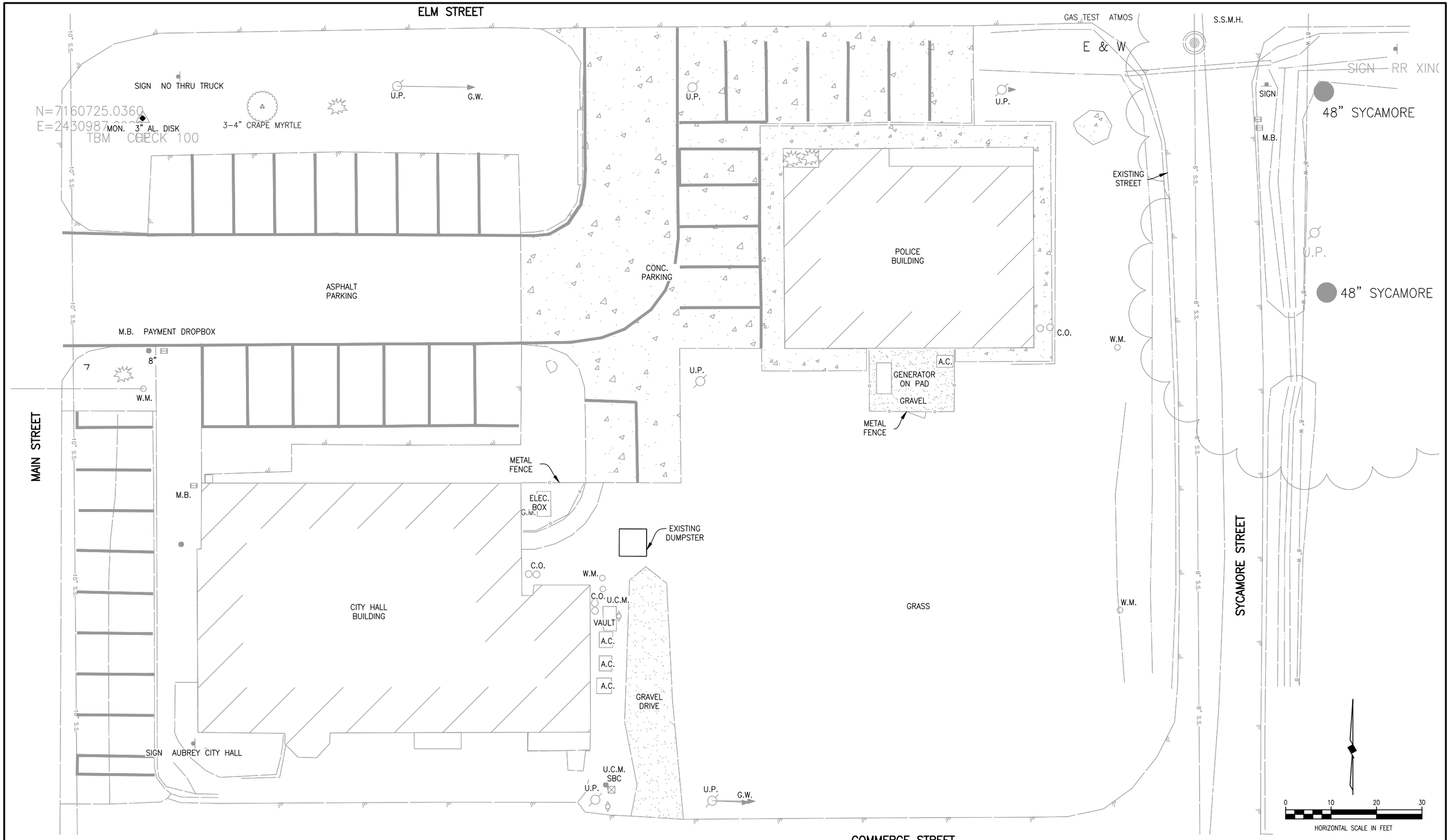

These plans and related specifications were prepared for construction of this specific project only. Reuse of these documents is not permitted without written authorization of Birkhoff, Hendricks & Carter, L.L.P. If this drawing is converted to an electronic file, if any discrepancy occurs between the electronic file and the Birkhoff, Hendricks & Carter, L.L.P. original document, the original document will govern in all cases.

BIRKHOFF, HENDRICKS & CARTER, L.L.P.
PROFESSIONAL ENGINEERS
TBPELS Engineer Firm No. 526; Survey Firm No. 10031800
11910 Greenville Ave., Suite 600
Dallas, Texas 75243 (214) 361-7900

STATE OF TEXAS
JOE RICHARD CARTER
64008
REGISTERED PROFESSIONAL ENGINEER

Joe Richard Carter
3/25/2025

CITY OF AUBREY, TEXAS

DANE STREET IMPROVEMENTS AND CITY HALL PARKING IMPROVEMENTS

CITY HALL EXISTING PARKING LAYOUT

BHC PROJECT NO. 2024-134

March, 2025

SHEET NO. **17**

REVISED: 3/28/25 – TBOOS H:\Projects\Aubrey\2024134 Dane Street P&D\Sheets\2024134 Parking Existing Site Plan.dwg PLOT SCALE: 1:2 PLOT STYLE: 11x17.ctb PLOTTED BY: TRISTAN BOOS ON 3/28/2025

Point Table				
Point #	Northing	Easting	Description	ELEV.
1	7160575.09	2430987.46	TC	686.04
2	7160575.07	2430992.46	TC	686.25
3	7160577.20	2430996.30	TC	686.21
4	7160581.42	2430998.91	TC	686.17
5	7160584.03	2431003.59	TC	686.13
6	7160583.84	2431055.58	TC	684.92
7	7160581.23	2431060.26	TC	684.79
8	7160576.93	2431062.91	TC	684.68
9	7160574.80	2431066.73	TC	684.58
10	7160574.78	2431071.73	TC	684.09
11	7160572.37	2431083.89	TC	683.83
12	7160582.33	2431094.24	TC/RAMP	684.92
13	7160629.89	2431094.41	TC/RAMP	685.28
14	7160633.89	2431094.41	TC/RAMP	685.30
15	7160634.39	2431094.41	TC	685.28
16	7160634.39	2431083.85	TC	686.12
17	7160644.89	2431088.99	TC	685.10
18	7160644.84	2431098.59	TC	684.62
19	7160655.27	2431098.64	TC	684.79
20	7160655.23	2431112.16	TC	684.46
21	7160654.89	2431203.72	TC/RAMP	682.38
22	7160664.92	2431213.75	TC	681.00
23	7160669.17	2431211.38	TC	681.18
24	7160671.77	2431207.10	TC	681.35
25	7160676.00	2431204.69	TC	681.53
26	7160724.38	2431204.42	TC	681.84
27	7160728.65	2431206.75	TC	681.89
28	7160731.32	2431210.99	TC	681.94
29	7160735.61	2431213.36	TC	682.00
30	7160745.55	2431203.33	TC	682.35
31	7160745.44	2431169.87	TC	682.85
32	7160745.25	2431253.29	TC	681.98
33	7160725.14	2431233.42	TC	681.21
34	7160665.06	2431233.75	TC	681.45
35	7160640.39	2431204.95	EP/SW	681.56

Point Table				
Point #	Northing	Easting	Description	ELEV.
36	7160630.35	2431214.95	EP	681.73
37	7160610.39	2431214.88	EP	681.90
38	7160600.39	2431204.84	EP/SW	681.91
39	7160600.70	2431118.80	EP	684.54
40	7160610.74	2431108.84	EP	684.81
41	7160630.70	2431108.91	EP	684.70
42	7160640.70	2431118.95	EP	684.01
43	7160640.41	2431199.95	EP/SW	681.66
44	7160586.22	2431114.25	TC	684.33
45	7160580.74	2431108.73	TC	684.34
46	7160571.21	2431117.70	TC	683.87
47	7160571.20	2431119.12	TC	683.83
48	7160573.57	2431123.39	TC	683.66
49	7160580.16	2431130.25	TC	683.34
50	7160579.97	2431182.24	TC	682.61
51	7160577.60	2431186.50	TC	682.56
52	7160570.93	2431193.39	TC	682.45
53	7160570.93	2431194.73	TC	682.44
54	7160571.53	2431199.70	TC	682.39
55	7160576.39	2431208.55	TC	682.34
56	7160579.56	2431210.21	TC	682.31
57	7160585.89	2431204.79	TC	682.27
58	7160574.59	2430987.46	TC	686.04
59	7160574.57	2430992.46	TC	685.75
60	7160576.94	2430996.73	TC	685.71
61	7160581.16	2430999.34	TC	685.67
62	7160583.53	2431003.59	TC	685.63
63	7160583.34	2431055.58	TC	684.42
64	7160580.97	2431059.83	TC	684.31
65	7160576.71	2431062.46	TC	684.19
66	7160574.30	2431066.72	TC	684.08
67	7160574.28	2431071.72	TC	684.09
68	7160655.28	2431098.14	TC	684.80
69	7160645.35	2431098.10	TC	684.65
70	7160645.39	2431089.04	TC	685.10

Point Table				
Point #	Northing	Easting	Description	ELEV.
97	7160589.88	2431208.04	DRAIN	682.04
98	7160600.38	2431208.04	DRAIN	681.84
99	7160620.38	2431208.04	DRAIN	681.69
100	7160640.41	2431208.04	DRAIN	681.49
101	7160680.21	2431208.04	DRAIN	681.33
102	7160700.21	2431208.04	DRAIN	681.51
103	7160720.21	2431208.04	DRAIN	681.63
104	7160576.14	2431136.23	DRAIN	682.99
105	7160576.07	2431156.23	DRAIN	682.75
106	7160575.99	2431176.23	DRAIN	682.52

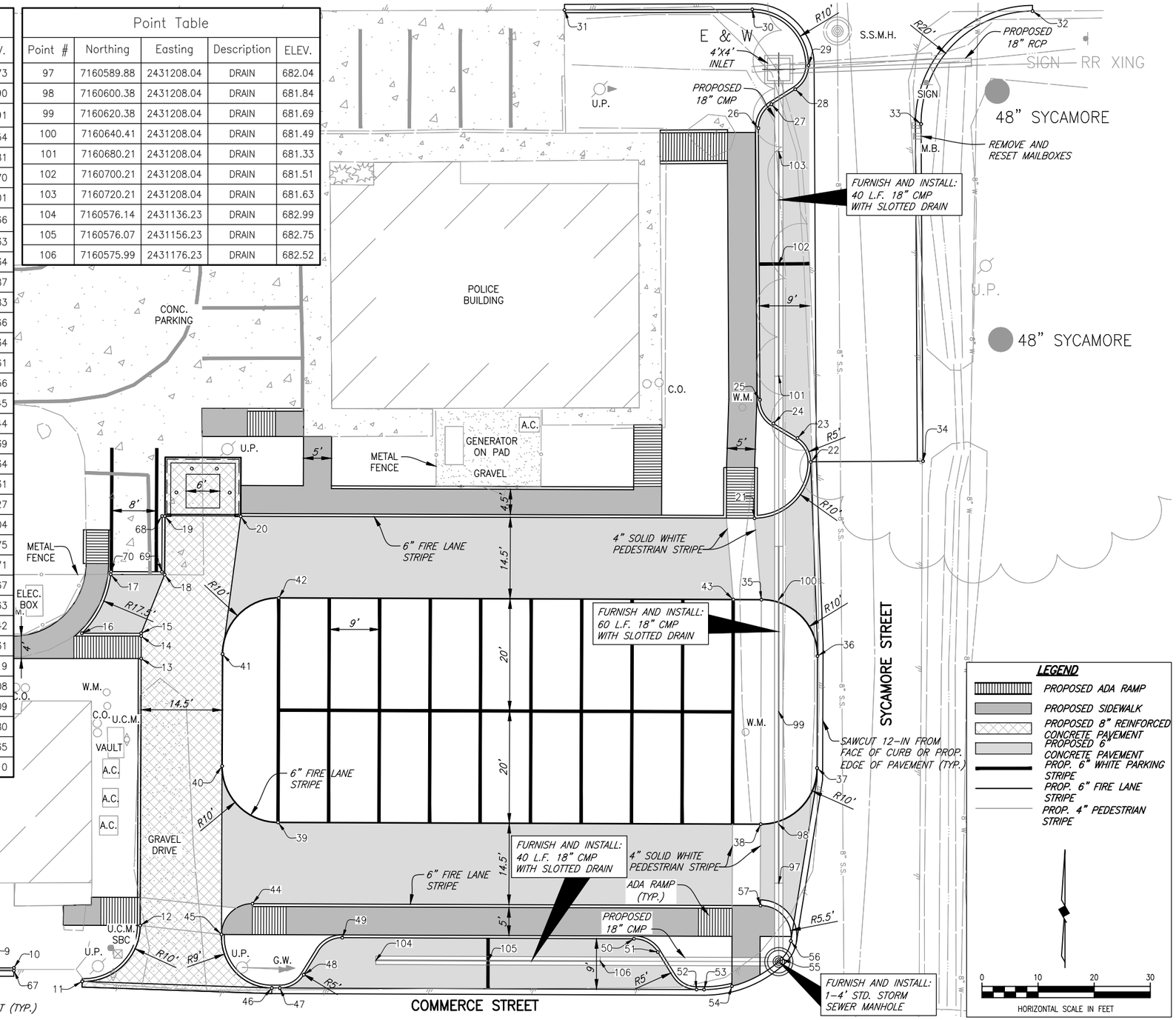

These plans and related specifications were prepared for construction of this specific project only. Reuse of these documents is not permitted without written authorization of Birkhoff, Hendricks & Carter, L.L.P. If this drawing is converted to an electronic file, if any discrepancy occurs between the electronic file and the Birkhoff, Hendricks & Carter, L.L.P. original document, the original document will govern in all cases.

BIRKHOFF, HENDRICKS & CARTER, L.L.P.
PROFESSIONAL ENGINEERS
TBPELS Engineer Firm No. 526; Survey Firm No. 10031800
11910 Greenville Ave., Suite 600
Dallas, Texas 75243 (214) 361-7900

STATE OF TEXAS
JOE RICHARD CARTER
64008
REGISTERED PROFESSIONAL ENGINEER

3/25/2025

CITY OF AUBREY, TEXAS
DANE STREET IMPROVEMENTS AND CITY HALL PARKING IMPROVEMENTS

CITY HALL PARKING LAYOUT PLAN

BHC PROJECT NO. 2024-134

March, 2025

SHEET NO. **18**

REVISED: 3/28/25 – TBOOS H:\Projects\Aubrey\2024134 Dane Street P&D\Sheets\Proposed Site Plan– Option 3.dwg PLOT SCALE: 1:2 PLOT STYLE: 11x17.ctb PLOTTED BY: TRISTAN BOOS ON 3/28/2025

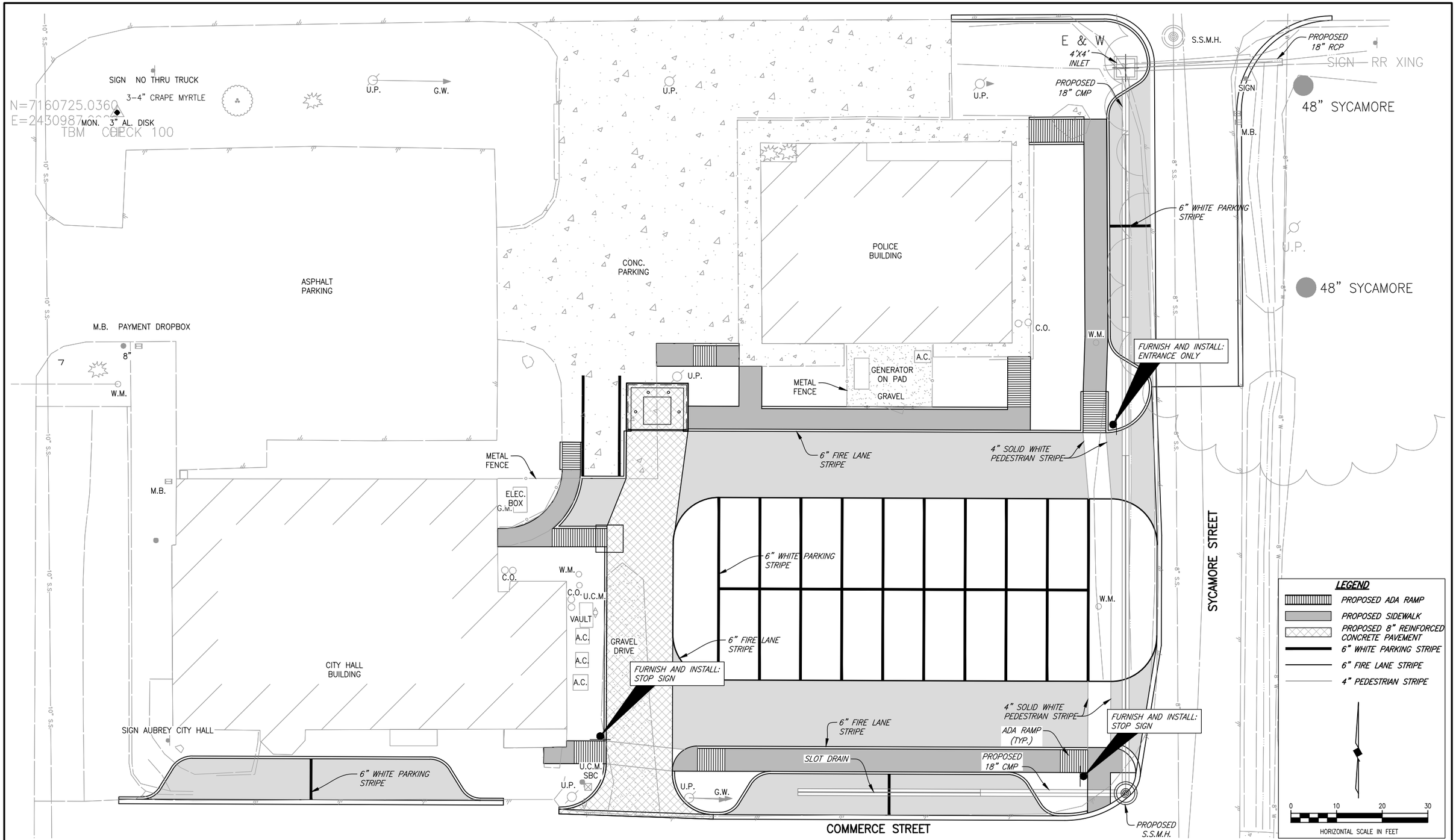

These plans and related specifications were prepared for construction of this specific project only. Reuse of these documents is not permitted without written authorization of Birkhoff, Hendricks & Carter, L.L.P. If this drawing is converted to an electronic file, if any discrepancy occurs between the electronic file and the Birkhoff, Hendricks & Carter, L.L.P. original document, the original document will govern in all cases.

BIRKHOFF, HENDRICKS & CARTER, L.L.P.
PROFESSIONAL ENGINEERS
TBPELS Engineer Firm No. 526; Survey Firm No. 10031800
11910 Greenville Ave., Suite 600
Dallas, Texas 75243 (214) 361-7900

STATE OF TEXAS
JOE RICHARD CARTER
64008
REGISTERED PROFESSIONAL ENGINEER

Joe Richard Carter
3/25/2025

CITY OF AUBREY, TEXAS

DANE STREET IMPROVEMENTS AND CITY HALL PARKING IMPROVEMENTS

CITY HALL PARKING MARKING AND SIGNAGE PLAN

BHC PROJECT NO. 2024-134

March, 2025

SHEET NO. **19**

REVISED: 3/28/25 – TBOOS H:\Projects\Aubrey\2024134 Dane Street P&D\Sheets\2024134 Parking Markings and Signage.dwg PLOT SCALE: 1:2 PLOT STYLE: 11x17.ctb PLOTTED BY: TRISTAN BOOS ON 3/28/2025

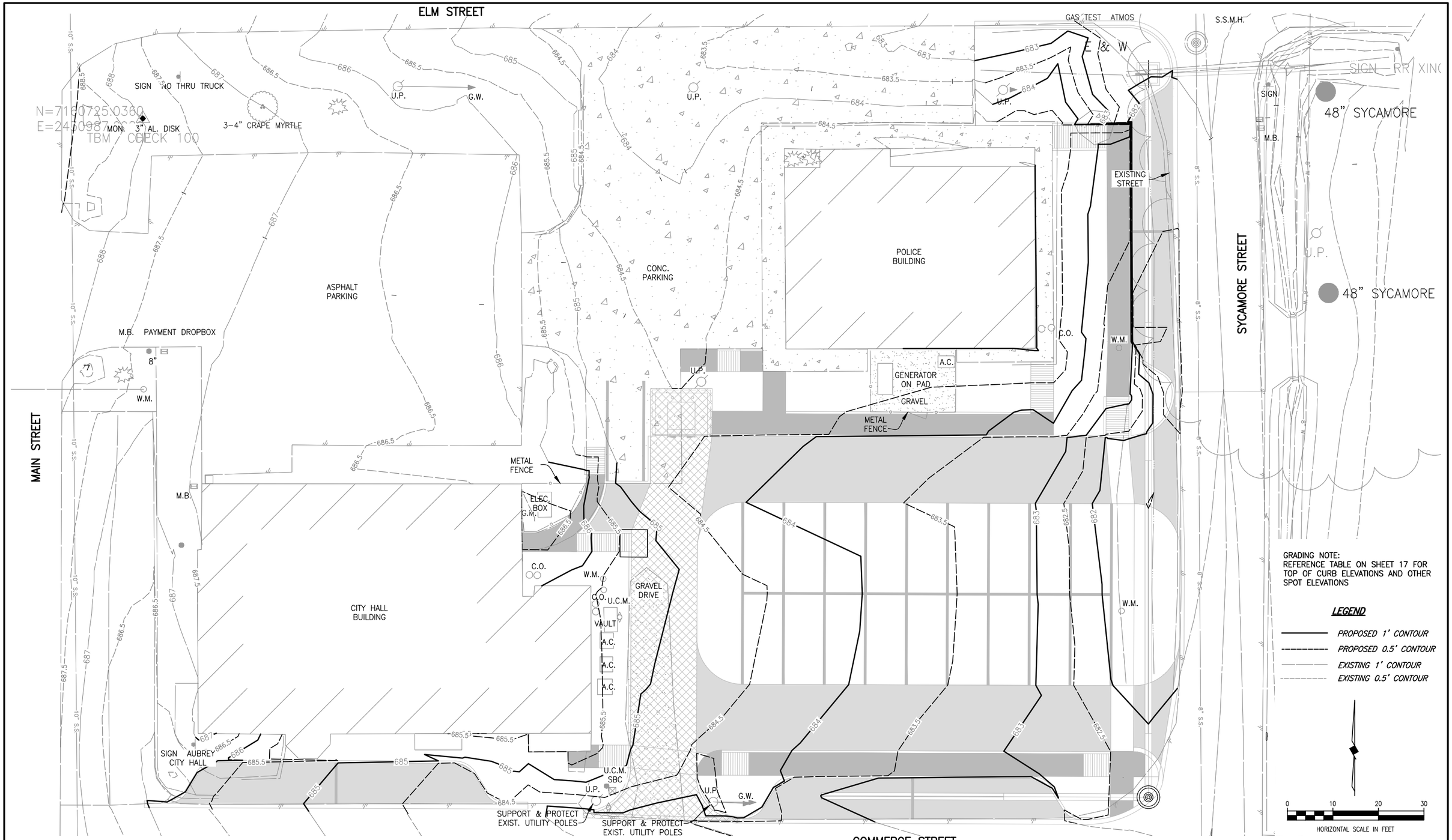

These plans and related specifications were prepared for construction of this specific project only. Reuse of these documents is not permitted without written authorization of Birkhoff, Hendricks & Carter, L.L.P. If this drawing is converted to an electronic file, if any discrepancy occurs between the electronic file and the Birkhoff, Hendricks & Carter, L.L.P. original document, the original document will govern in all cases.

BIRKHOFF, HENDRICKS & CARTER, L.L.P.
PROFESSIONAL ENGINEERS
TBPELS Engineer Firm No. 526; Survey Firm No. 10031800
11910 Greenville Ave., Suite 600
Dallas, Texas 75243 (214) 361-7900

STATE OF TEXAS
JOE RICHARD CARTER
64008
REGISTERED PROFESSIONAL ENGINEER

Joe Richard Carter
3/25/2025

CITY OF AUBREY, TEXAS
DANE STREET IMPROVEMENTS AND CITY HALL PARKING IMPROVEMENTS

PROPOSED CITY HALL PARKING GRADING PLAN

BHC PROJECT NO. 2024-134

March, 2025

SHEET NO. **20**

REVISED: 3/28/25 – TBOOS H:\Projects\Aubrey\2024134 Dane Street P&D\Sheets\Proposed Grading Plan.dwg PLOT SCALE: 1:2 PLOT STYLE: 11x17.ctb PLOTTED BY: TRISTAN BOOS ON 3/28/2025

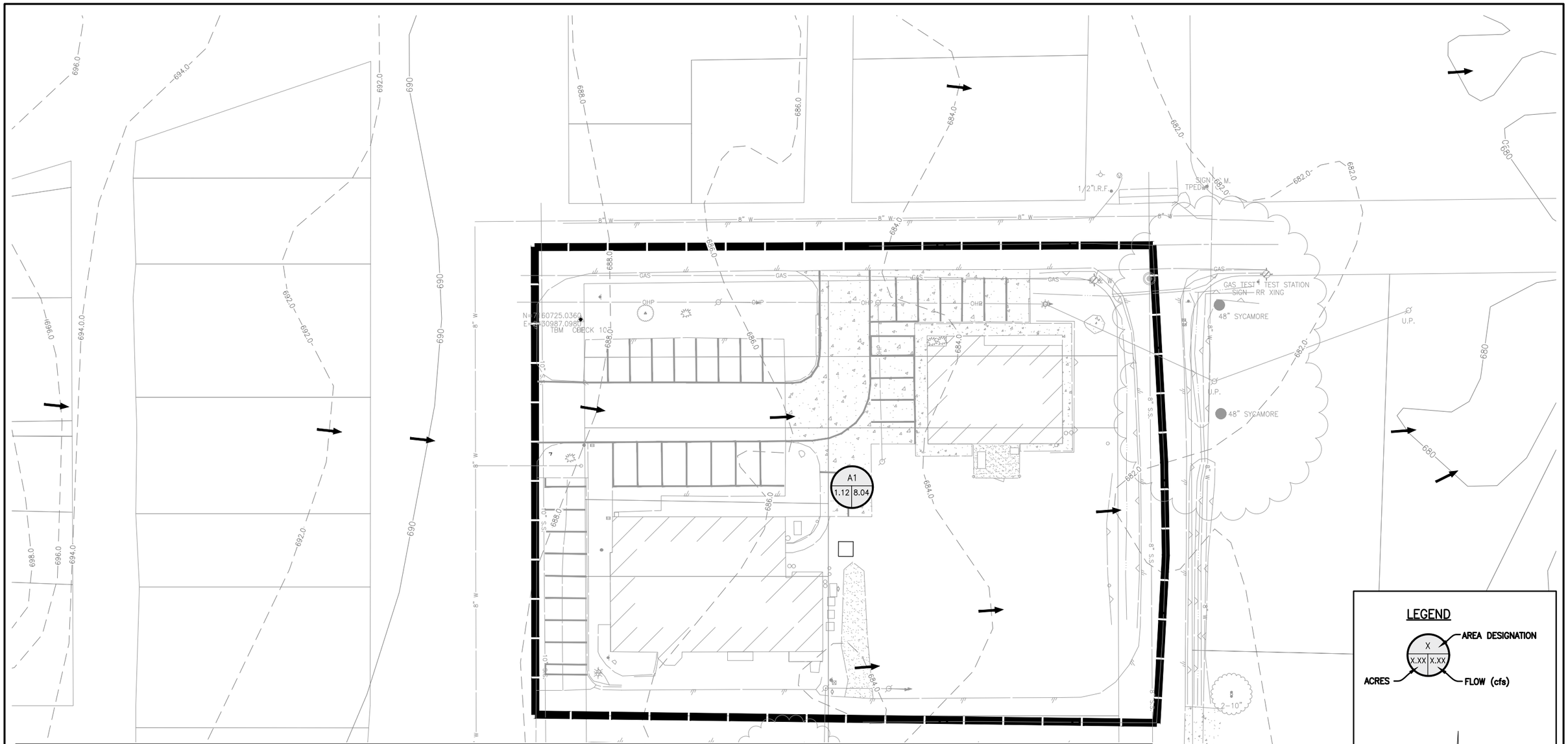

Incremental Drainage Area												
Area. No.	Inlet Size	Total Area (Ac.)	Downtown Area 0.90	Residential Area 0.60	Open Area 0.35	Effective Runoff "C"	Incremental "CA"	Accumulated "CA"	Time of Concentration (Min.)	Design Storm Frequency (Yrs.)	Intensity (I) (In./Hr.)	Total Flow (Q) (c.f.s.)
1	2	3	4	5	6	7	8	9	10	11	12	13
Name												
A-1	None	1.123	0.872	0.000	0.251	0.777	0.873	0.873	10.00	100	9.24	8.06

These plans and related specifications were prepared for construction of this specific project only. Reuse of these documents is not permitted without written authorization of Birkhoff, Hendricks & Carter, L.L.P. If this drawing is converted to an electronic file, if any discrepancy occurs between the electronic file and the Birkhoff, Hendricks & Carter, L.L.P. original document, the original document will govern in all cases.

BIRKHOFF, HENDRICKS & CARTER, L.L.P.
PROFESSIONAL ENGINEERS
TBPE Firm No. 526; TBPLS Firm No. 10031800
11910 Greenville Ave., Suite 600
Dallas, Texas 75243 (214) 361-7900

STATE OF TEXAS
JOE RICHARD CARTER
64008
REGISTERED PROFESSIONAL ENGINEER

Joe Richard Carter
3/25/2025

CITY OF AUBREY, TEXAS
DANE STREET IMPROVEMENTS AND CITY HALL PARKING IMPROVEMENTS

OVERALL EXISTING DRAINAGE AREA MAP

BHC PROJECT NO. 2024-134

March, 2025

SHEET NO. **21**

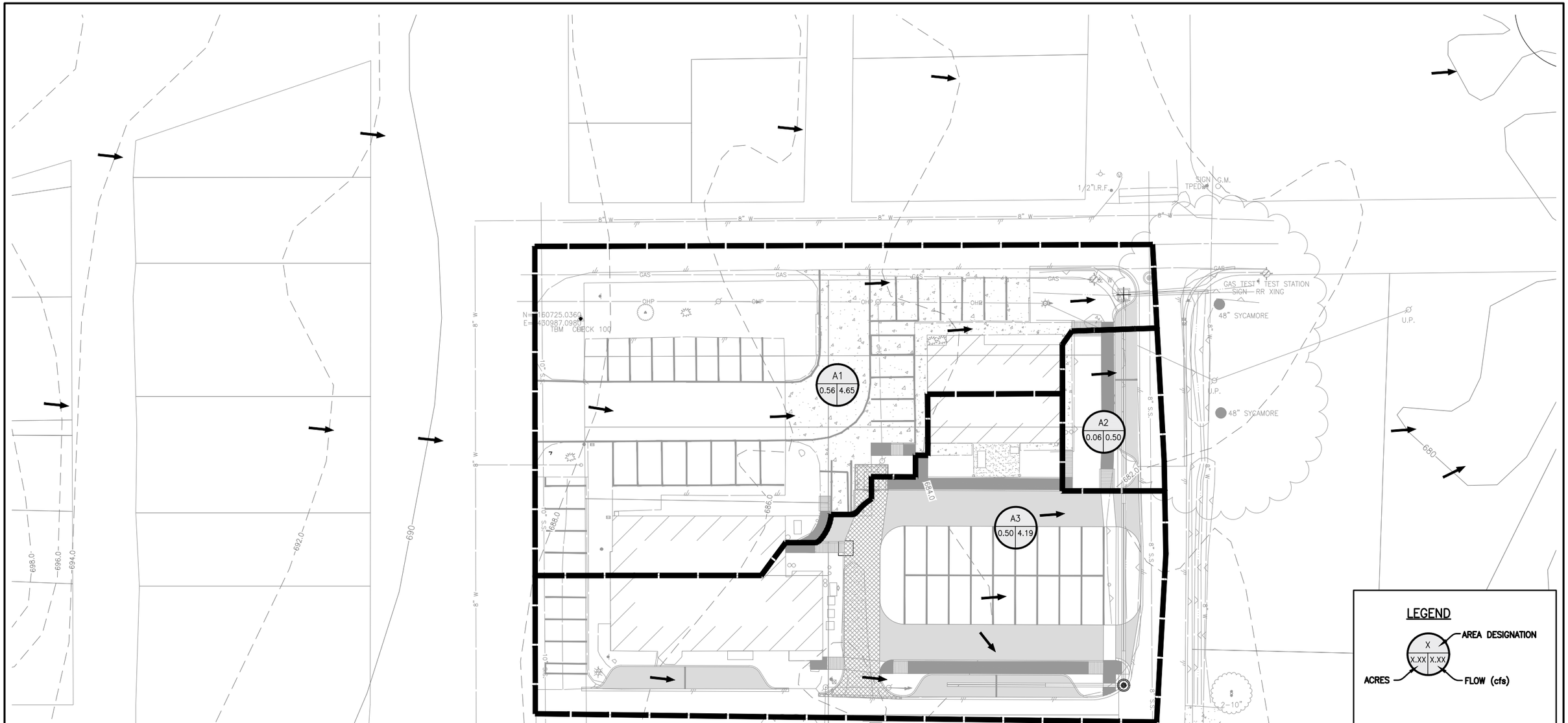

Incremental Drainage Area												
Area. No.	Inlet Size	Total Area (Ac.)	Downtown Area 0.90	Residential Area 0.60	Open Area 0.35	Effective Runoff "C"	Incremental "CA"	Accumulated "CA"	Inlet Time of Concentration (Min.)	Design Storm Frequency (Yrs.)	Intensity (I) (In./Hr.)	Total Flow (Q) (c.f.s.)
1	2	3	4	5	6	7	8	9	10	11	12	13
Name												
A-1	4'x4' Drop Inlet	0.559	0.559	0.000	0.000	0.900	0.503	0.503	10.00	100	9.24	4.65
A-2	Slotted Drain	0.060	0.060	0.000	0.000	0.900	0.054	0.054	10.00	100	9.24	0.50
A-3	Slotted Drain	0.504	0.504	0.000	0.000	0.900	0.454	0.454	10.00	100	9.24	4.19

LEGEND

X — AREA DESIGNATION
X.XX — ACRES
X.XX — FLOW (cfs)

0 20 40 60
HORIZONTAL SCALE IN FEET

These plans and related specifications were prepared for construction of this specific project only. Reuse of these documents is not permitted without written authorization of Birkhoff, Hendricks & Carter, L.L.P. If this drawing is converted to an electronic file, if any discrepancy occurs between the electronic file and the Birkhoff, Hendricks & Carter, L.L.P. original document, the original document will govern in all cases.

BIRKHOFF, HENDRICKS & CARTER, L.L.P.
PROFESSIONAL ENGINEERS
TBPE Firm No. 526; TBPLS Firm No. 10031800
11910 Greenville Ave., Suite 600
Dallas, Texas 75243 (214) 361-7900

STATE OF TEXAS
JOE RICHARD CARTER
64008
REGISTERED PROFESSIONAL ENGINEER

Joe Richard Carter
3/25/2025

CITY OF AUBREY, TEXAS
DANE STREET IMPROVEMENTS AND CITY HALL PARKING IMPROVEMENTS

OVERALL PROPOSED DRAINAGE AREA MAP

BHC PROJECT NO. 2024-134

March, 2025

SHEET NO. **22**

REVISED: 3/28/25 – TBOOS H:\Projects\Aubrey\2024134 Dane Street P&D\Basedwgs\Parking\Prop DA Map.dwg PLOT SCALE: 1:2 PLOT STYLE: 11x17.ctb PLOTTED BY: TRISTAN BOOS ON 3/28/2025

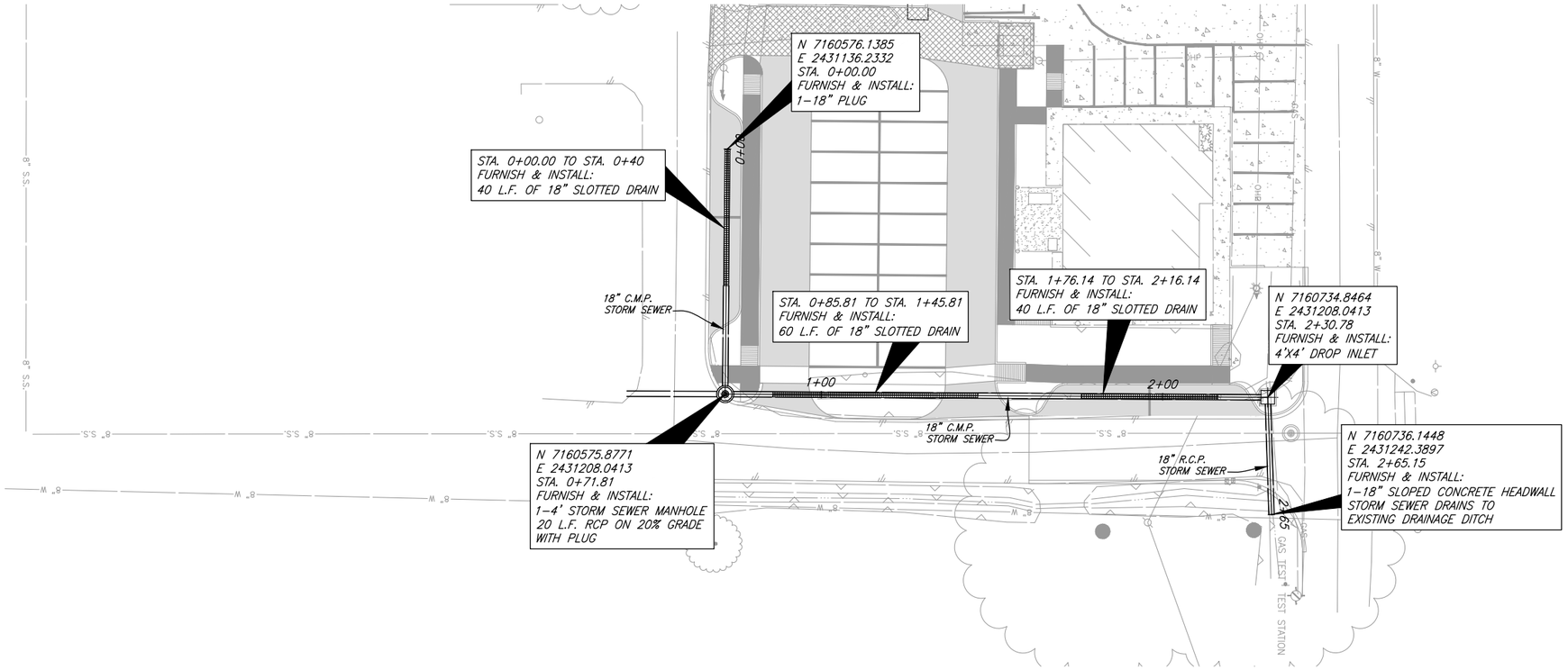

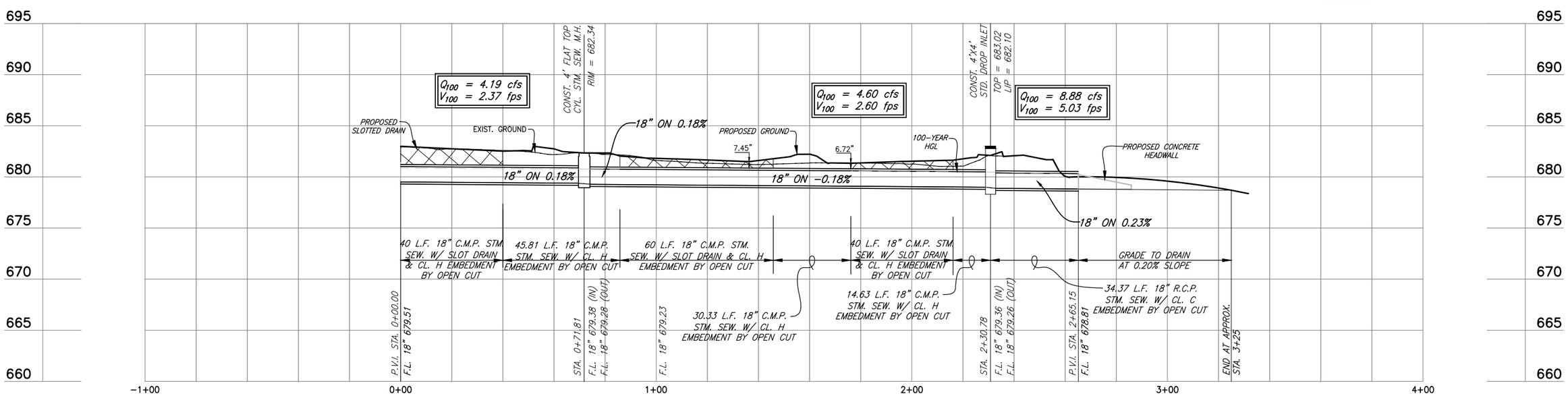

These plans and related specifications were prepared for construction of this specific project only. Reuse of these documents is not permitted without written authorization of Birkhoff, Hendricks & Carter, L.L.P. If this drawing is converted to an electronic file, if any discrepancy occurs between the electronic file and the Birkhoff, Hendricks & Carter, L.L.P. original document, the original document will govern in all cases.

BIRKHOFF, HENDRICKS & CARTER, L.L.P.
PROFESSIONAL ENGINEERS
TBPE Firm No. 526; TBPLS Firm No. 10031800
11910 Greenville Ave., Suite 600
Dallas, Texas 75243 (214) 361-7900

STATE OF TEXAS
JOE RICHARD CARTER
84008
REGISTERED PROFESSIONAL ENGINEER

Joe Richard Carter
3/25/2025

CITY OF AUBREY, TEXAS

DANE STREET IMPROVEMENTS AND CITY HALL PARKING IMPROVEMENTS

POLICE STATION STORM SEWER

BHC PROJECT NO. 2024-134

March, 2025

SHEET NO. **23**

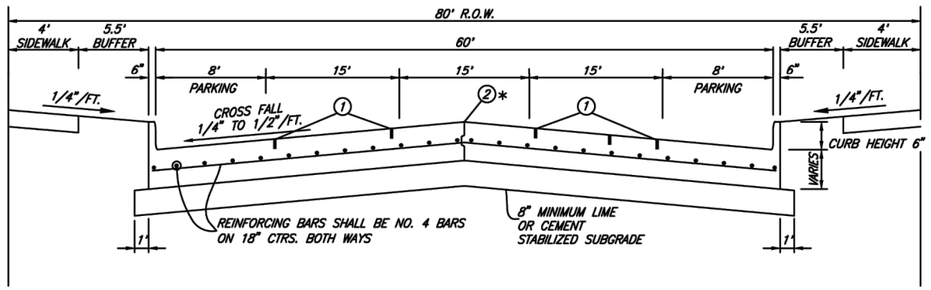

CONCRETE INDUSTRIAL STREET WITH PARKING SECTION

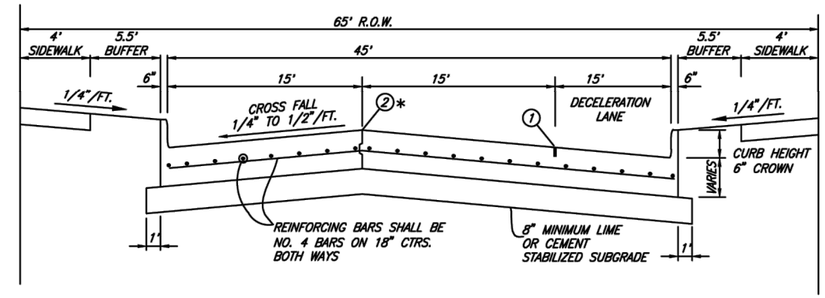

CONCRETE INDUSTRIAL LOCAL STREET WITH RIGHT TURN DECELERATION LANE SECTION

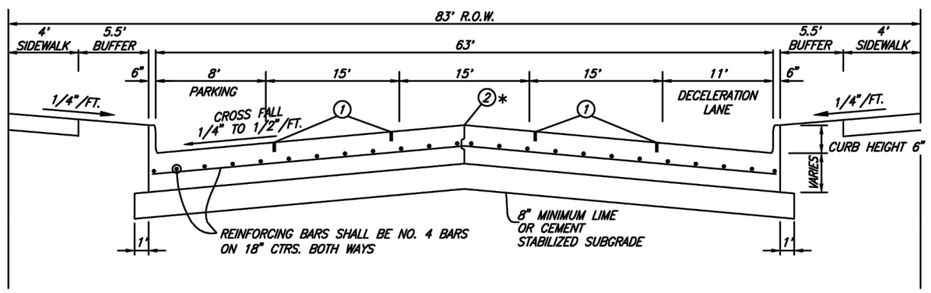

CONCRETE INDUSTRIAL STREET WITH DECELERATION LANE SECTION

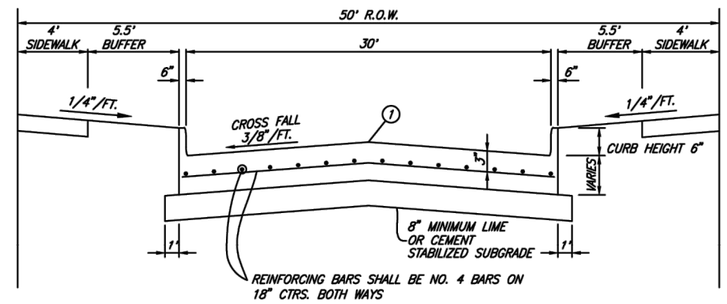

CONCRETE INDUSTRIAL STREET REGULAR SECTION

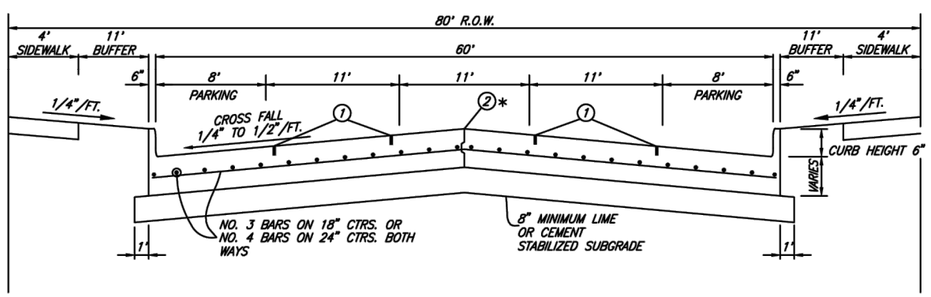

MAJOR COLLECTOR WITH PARKING SECTION

LEGEND

1 – SAWED LONGITUDINAL DUMMY JOINT

2 – CONSTRUCTION JOINT (FULL WIDTH PVMT. IS ALLOWED WHERE APPROVED BY THE CITY)

Maximum Thickness	Aretrial	Collector	Local	Truck Lane	Fire Lane	Industrial
Pavement	10"	10"	8"	12"	8"	12"
Subgrade	8"	8"	8"	8"	8"	8"

NOTES:
LIME OR CEMENT SUBGRADE DESIGN TO BE RECOMMENDED BY GEOTECHINICAL ENGINEER AND MUST BE APPROVED BY THE PUBLIC WORKS DIRECTOR.

These plans and related specifications were prepared for construction of this specific project only. Reuse of these documents is not permitted without written authorization of Birkhoff, Hendricks & Carter, L.L.P. If this drawing is converted to an electronic file, if any discrepancy occurs between the electronic file and the Birkhoff, Hendricks & Carter, L.L.P. original document, the original document will govern in all cases.

BIRKHOFF, HENDRICKS & CARTER, L.L.P.
PROFESSIONAL ENGINEERS
TBPE Firm No. 526; TBPLS Firm No. 10031800
11910 Greenville Ave., Suite 600
Dallas, Texas 75243 (214) 361-7900

STATE OF TEXAS
JOE RICHARD CARTER
64008
REGISTERED PROFESSIONAL ENGINEER

Joe Richard Carter
3/25/2025

CITY OF AUBREY, TEXAS
DANE STREET IMPROVEMENTS AND CITY HALL PARKING IMPROVEMENTS

AUBREY DETAILS

BHC PROJECT NO. 2024-134

March, 2025

SHEET NO. **24**

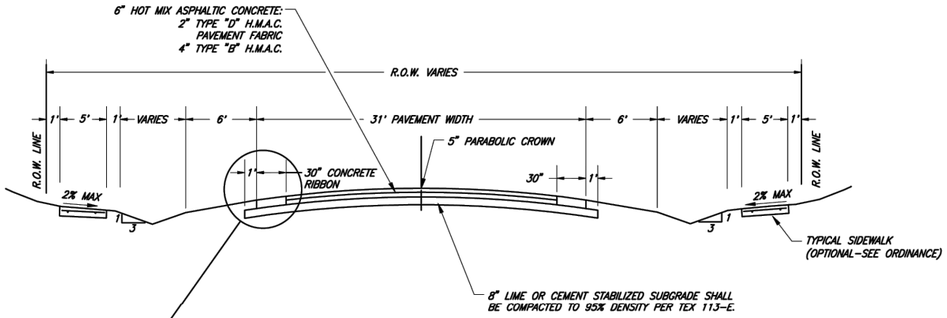

31' HMAC PAVEMENT SECTION
ESTATE LOT
TYPICAL CROSS SECTION

NOTES:

1. BAR DITCH SIDE SLOPE VARIES DEPENDING UPON DESIGN. NO GREATER THAN 3:1 WITHOUT ARMORING.
2. CUL DE SAC SHALL HAVE A 7 INCH PARABOLIC CROWN.
3. PAVING AND SUBGRADE ARE MINIMUMS AND SHALL BE VERIFIED BY GEOTECHNICAL RECOMMENDATION.
4. HMAC SECTIONS SHALL ONLY BE USED FOR REPAIR OF EXISTING HMAC STREET. NO PROPOSED STREETS MAY BE HMAC.

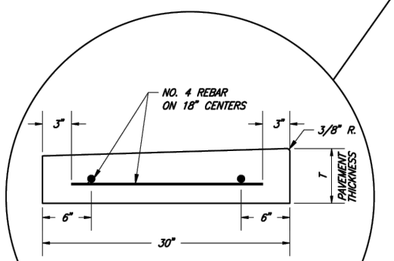

30" CONCRETE RIBBON

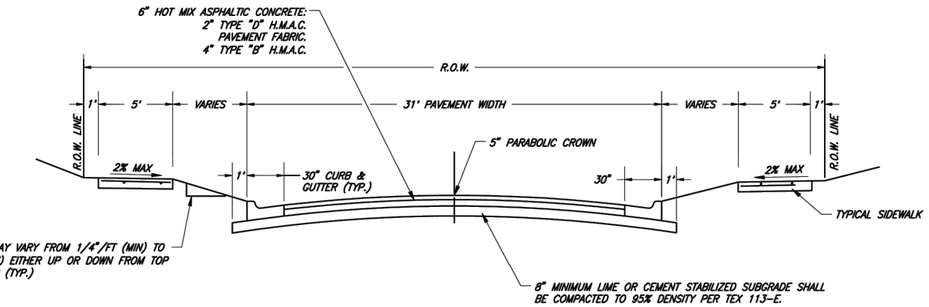

31' HMAC PAVEMENT SECTION
LOCAL STREET
TYPICAL CROSS SECTION

NOTES:

1. FOR 30" GUTTER DETAIL, SEE "SEPARATE CURB & GUTTER" DETAIL.
2. CUL DE SAC SHALL HAVE A 7 INCH PARABOLIC CROWN.
3. PAVING AND SUBGRADE ARE MINIMUMS AND SHALL BE VERIFIED BY GEOTECHNICAL RECOMMENDATION.
4. HMAC SECTIONS SHALL ONLY BE USED FOR REPAIR OF EXISTING HMAC STREET. NO PROPOSED STREETS MAY BE HMAC.

NOTE:
LIME OR CEMENT SUBGRADE DESIGN TO BE RECOMMENDED BY GEOTECHNICAL ENGINEER AND MUST BE APPROVED BY THE PUBLIC WORKS DIRECTOR.

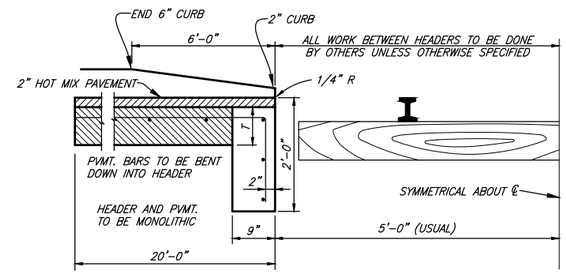

RAIL HEADER

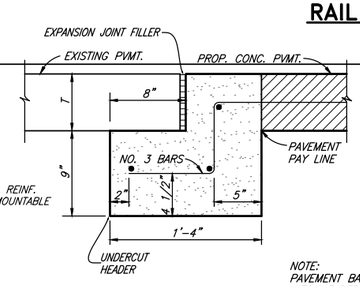

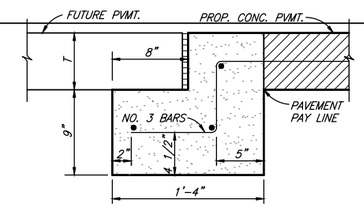

NOTE:
PAVEMENT BARS TO BE BENT DOWN INTO HEADER. PAVEMENT AND HEADER SHALL BE MONOLITHIC.

STREET HEADER

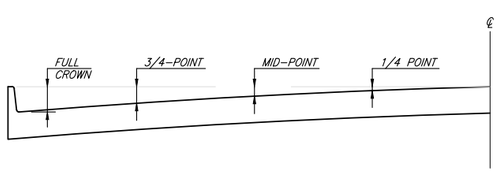

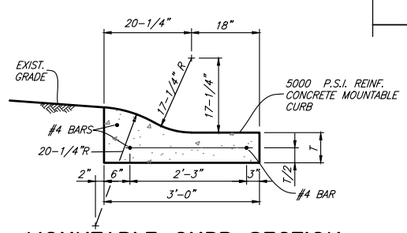

MOUNTABLE CURB SECTION

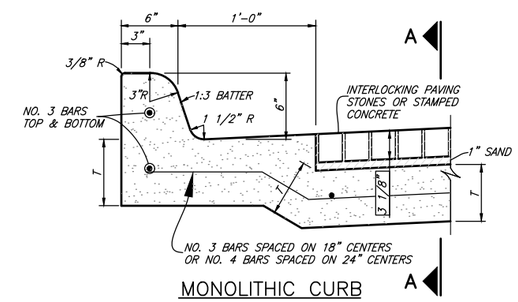

MONOLITHIC CURB

ROADWAY WIDTH (W)	TOTAL CROWN HEIGHT	3/4 POINT	MID-POINT	1/4 POINT
26'	4"	2-1/4"	1"	1/4"
36'	6"	3-3/8"	1-1/2"	3/8"
44'	6"	3-3/8"	1-1/2"	3/8"

TABLE OF CROWN HEIGHTS AND ORDINATES FOR VARIOUS PARABOLIC SECTIONS

SLIP-FORM PAVEMENT MUST MEET CROWN GRADES AT GUTTERS, AT MID-POINTS & ℄

PARABOLIC ROADS ONLY TO BE CONSTRUCTED WITH SLIP FORM PAVERS

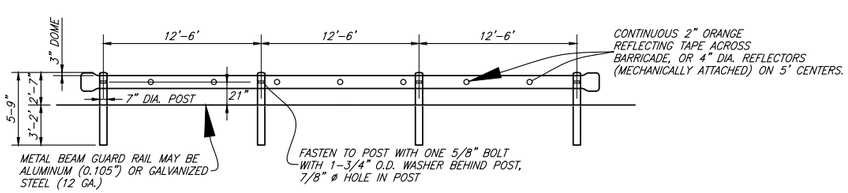

NON CONSTRUCTION BARRICADES (PERMANENT BARRICADES) SHALL CONSIST OF TxDOT GF(TD)-87 METAL BEAM GUARD FENCE WITH TERMINAL CONNECTOR SECTIONS AT EACH END. PERMANENT BARRICADES SHALL BE MANUFACTURED AND CONSTRUCTED IN ACCORDANCE WITH TxDOT DETAILS. BARRICADE SHALL EXTEND FROM OUTSIDE CURB TO OUTSIDE CURB.

TYPICAL PERMANENT BARRICADE DETAIL

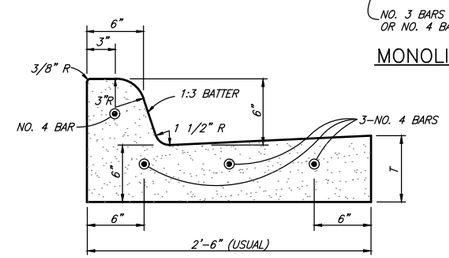

SEPARATE CURB AND GUTTER

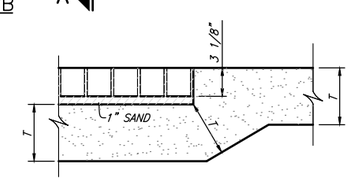

SECTION A-A

PAVING STONES SHALL BE PER NCTCOG ITEMS 2.1.6 AND 8.17

CURB AND CURB AND GUTTER

These plans and related specifications were prepared for construction of this specific project only. Reuse of these documents is not permitted without written authorization of Birkhoff, Hendricks & Carter, L.L.P. If this drawing is converted to an electronic file, if any discrepancy occurs between the electronic file and the Birkhoff, Hendricks & Carter, L.L.P. original document, the original document will govern in all cases.

BIRKHOFF, HENDRICKS & CARTER, L.L.P.
PROFESSIONAL ENGINEERS
TBPE Firm No. 526; TBPLS Firm No. 10031800
11910 Greenville Ave., Suite 600
Dallas, Texas 75243 (214) 361-7900

STATE OF TEXAS
JOE RICHARD CARTER
64008
REGISTERED PROFESSIONAL ENGINEER

3/25/2025

CITY OF AUBREY, TEXAS
DANE STREET IMPROVEMENTS AND CITY HALL PARKING IMPROVEMENTS

AUBREY DETAILS

BHC PROJECT NO. 2024-134

March, 2025

SHEET NO. **25**

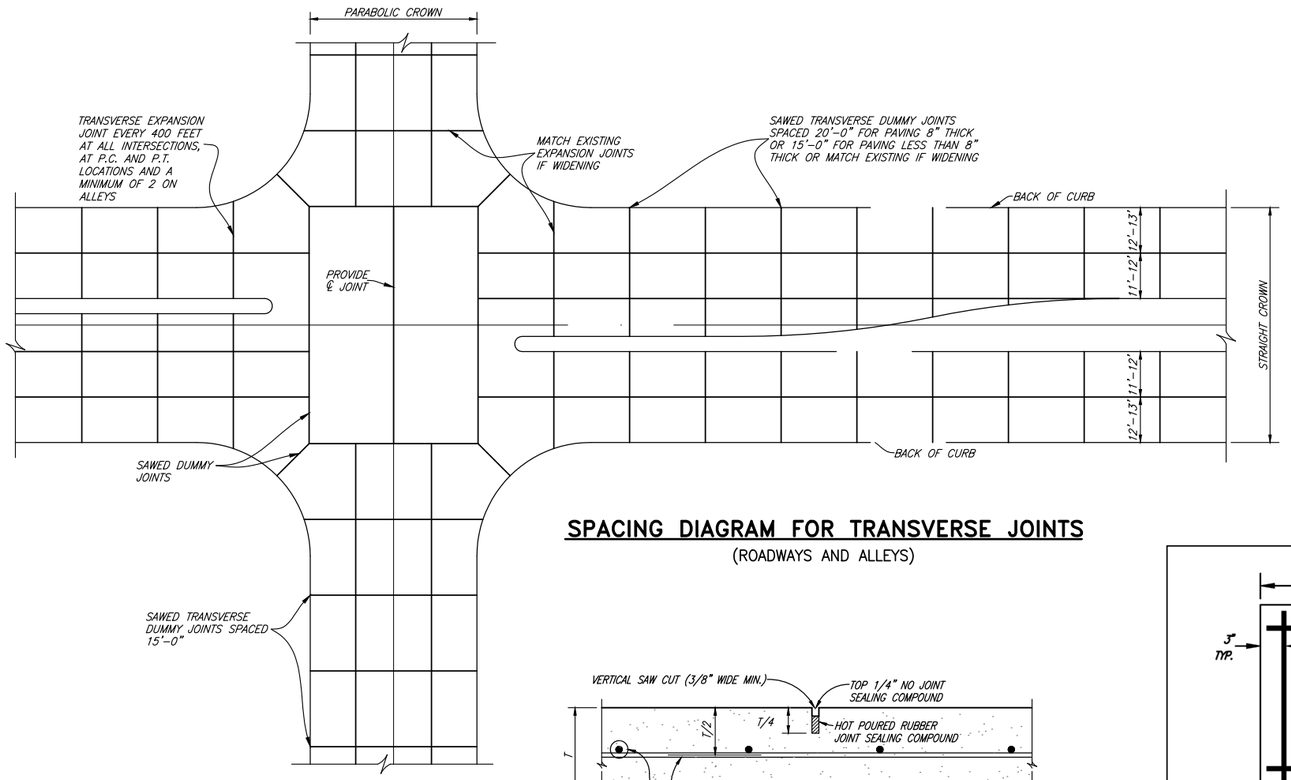

SPACING DIAGRAM FOR TRANSVERSE JOINTS

(ROADWAYS AND ALLEYS)

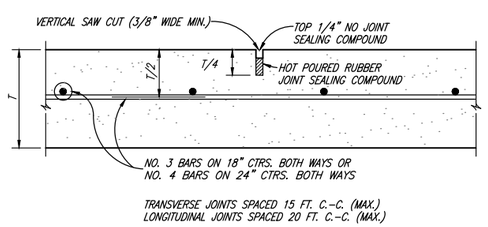

TRANSVERSE JOINTS SPACED 15 FT. C.-C. (MAX.)
LONGITUDINAL JOINTS SPACED 20 FT. C.-C. (MAX.)

SAWED DUMMY JOINT

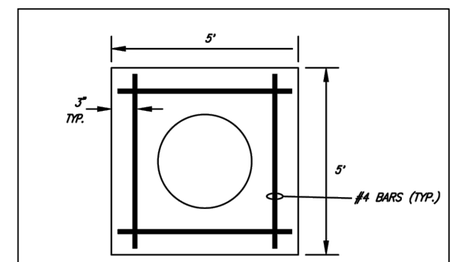

MANHOLE PAD PLAN

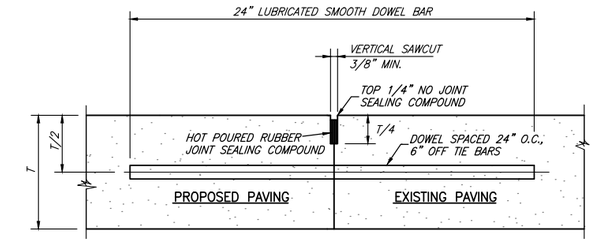

NOTE:
1. T-8" AND GREATER NO. 6 BAR, T-6" AND LESS NO. 5 BAR
2. LONGITUDINAL BUTT CONSTRUCTION MAY BE UTILIZED IN PLACE OF LONGITUDINAL HINGED (KEYWAY) JOINT AT CONTRACTORS OPTION.
3. DOWEL BARS SHALL BE DRILLED INTO PAVEMENT HORIZONTALLY BY USE OF A MECHANICAL RIG. HAND DRILLING NOT ACCEPTABLE. DAMAGE TO EXISTING PAVEMENT SHALL BE REMOVED BY CONTRACTOR AND JOINT CONSTRUCTED AT CONTRACTORS EXPENSE.
4. DOWEL BAR SHOWN IS IN ADDITION TO TIE BARS (12" O.C.-6" OFF DOWELS).
5. TIE BARS SHALL BE NO. 5 BAR DEFORMED. TIE BAR SHALL HAVE A LENGTH OF 24 INCHES.

LONGITUDINAL BUTT JOINT

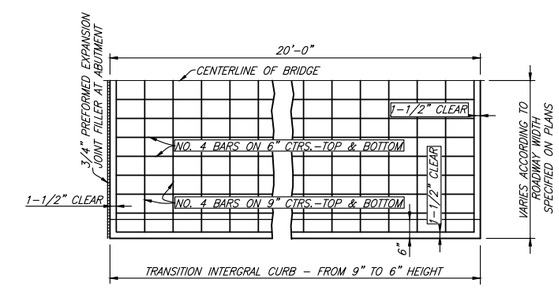

PLAN

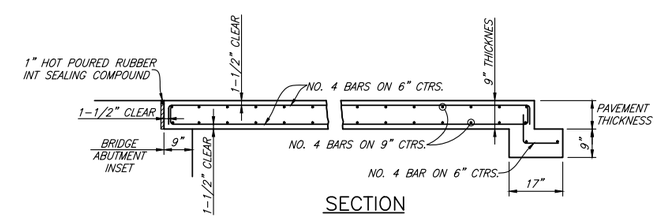

SECTION

BRIDGE APPROACH SLAB

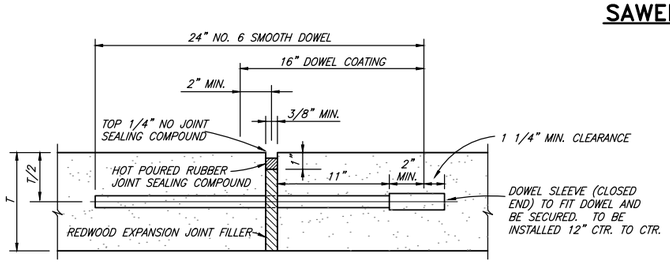

TRANSVERSE EXPANSION JOINT NOTES:

1. DOWELS AND REINFORCING BARS SHALL BE SUPPORTED BY AN APPROVED DEVICE.
2. TRANSVERSE EXPANSION JOINTS SHALL BE SPACED AT 400 FT. MAXIMUM AND AT ALL INTERSECTIONS.

TRANSVERSE EXPANSION JOINT

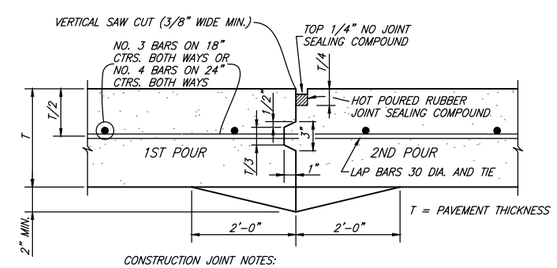

CONSTRUCTION JOINT NOTES:

1. CONTRACTOR SHALL PROTECT KEYWAY PRIOR TO SECOND POUR. IF LONGITUDINAL KEYWAY IS DAMAGED, CONTRACTOR SHALL REPAIR WITH THE USE OF LONGITUDINAL BUTT JOINT (DRILL DOWELS INTO FIRST POUR).
2. THICKENED EDGES ARE REQUIRED FOR FUTURE WIDENING ONLY.

CONSTRUCTION JOINT

These plans and related specifications were prepared for construction of this specific project only. Reuse of these documents is not permitted without written authorization of Birkhoff, Hendricks & Carter, L.L.P. If this drawing is converted to an electronic file, if any discrepancy occurs between the electronic file and the Birkhoff, Hendricks & Carter, L.L.P. original document, the original document will govern in all cases.

BIRKHOFF, HENDRICKS & CARTER, L.L.P.
PROFESSIONAL ENGINEERS
TBPE Firm No. 526; TBPLS Firm No. 10031800
11910 Greenville Ave., Suite 600
Dallas, Texas 75243 (214) 361-7900

STATE OF TEXAS
JOE RICHARD CARTER
64008
REGISTERED PROFESSIONAL ENGINEER

Joe Richard Carter
3/25/2025

CITY OF AUBREY, TEXAS
DANE STREET IMPROVEMENTS AND CITY HALL PARKING IMPROVEMENTS

AUBREY DETAILS

BHC PROJECT NO. 2024-134

March, 2025

SHEET NO. **26**

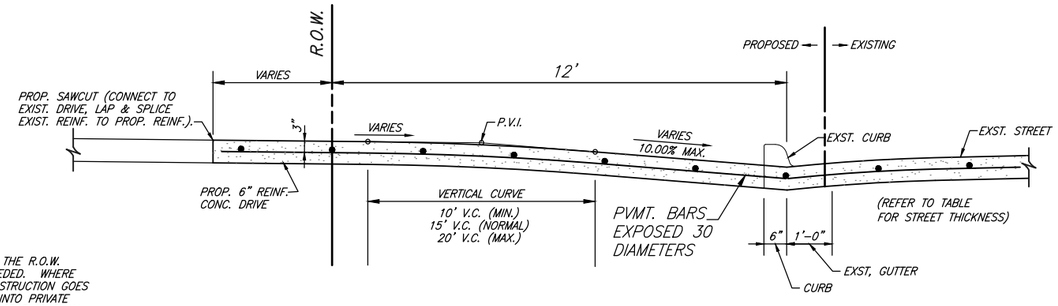

NOTE:
FINISHED GRADING WITHIN THE R.O.W. SHALL BE BROADCAST SEEDED. WHERE PROPOSED DRIVEWAY CONSTRUCTION GOES BEYOND THE R.O.W. AND INTO PRIVATE PROPERTY, THE FINISHED GRADING SHALL BE BLOCK SODDED TO RESTORE THE LANDSCAPING TO ITS PRE-CONSTRUCTION APPEARANCE.

SECTION B–B

N.T.S.

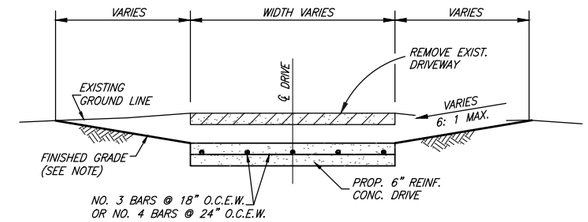

SECTION A–A

N.T.S.

Maximum Thickness	Aretrial	Collector	Local	Truck Lane	Fire Lane	Industrial
Pavement	10"	10"	8"	12"	8"	12"
Subgrade	8"	8"	8"	8"	8"	8"

DRIVEWAY RETURN SECTIONS

NOTES:
1) 30' RADIUS SHALL BE WITHIN THE PROPERTY BOUNDARY LIMITS OTHERWISE ACCESS EASEMENT MUST BE OBTAINED FROM ADJACENT PROPERTY OWNER.
2) FOR HEAVY INDUSTRIAL COMMERCIAL USE, PAVEMENT THICKNESS SHALL BE MINIMUM 12 INCHES.

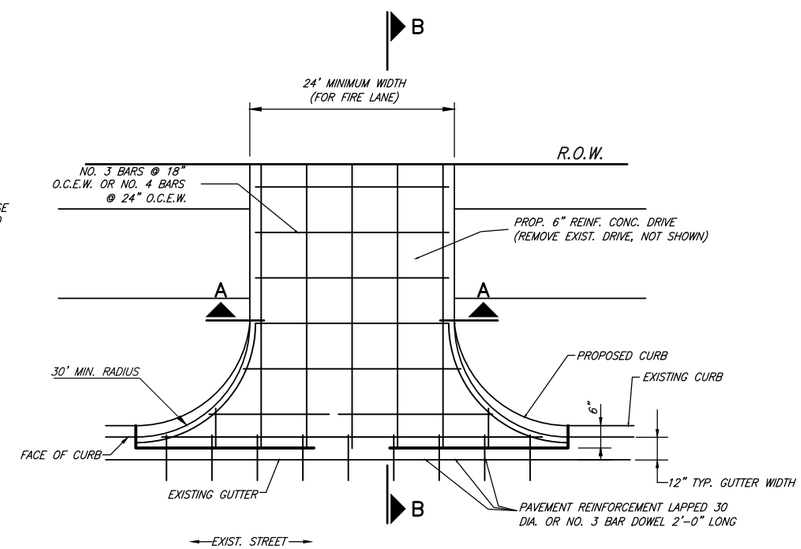

COMMERCIAL TYPICAL DRIVE CONNECTION TO EXISTING CONCRETE STREET

N.T.S.

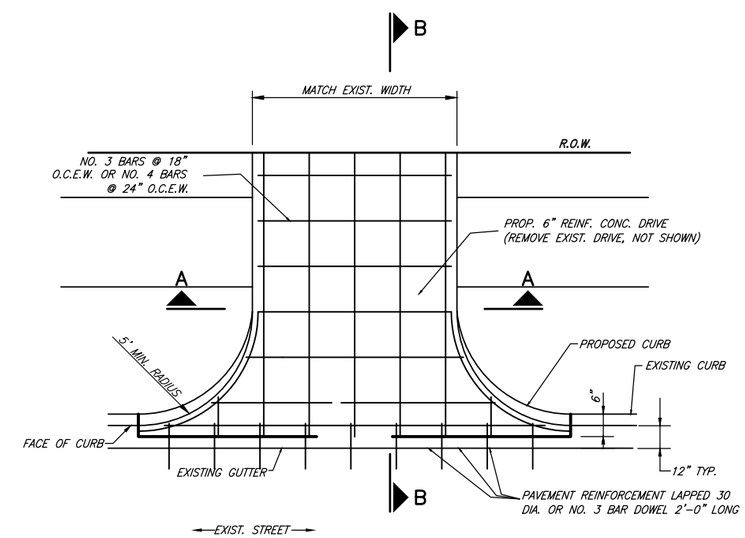

RESIDENTIAL TYPICAL DRIVE CONNECTION TO EXISTING CONCRETE STREET

These plans and related specifications were prepared for construction of this specific project only. Reuse of these documents is not permitted without written authorization of Birkhoff, Hendricks & Carter, L.L.P. If this drawing is converted to an electronic file, if any discrepancy occurs between the electronic file and the Birkhoff, Hendricks & Carter, L.L.P. original document, the original document will govern in all cases.

BIRKHOFF, HENDRICKS & CARTER, L.L.P.
PROFESSIONAL ENGINEERS
TBPE Firm No. 526; TBPLS Firm No. 10031800
11910 Greenville Ave., Suite 600
Dallas, Texas 75243 (214) 361-7900

STATE OF TEXAS
JOE RICHARD CARTER
64008
REGISTERED PROFESSIONAL ENGINEER

Joe Richard Carter
3/25/2025

CITY OF AUBREY, TEXAS
DANE STREET IMPROVEMENTS AND CITY HALL PARKING IMPROVEMENTS

AUBREY DETAILS

BHC PROJECT NO. 2024-134

March, 2025

SHEET NO. **27**

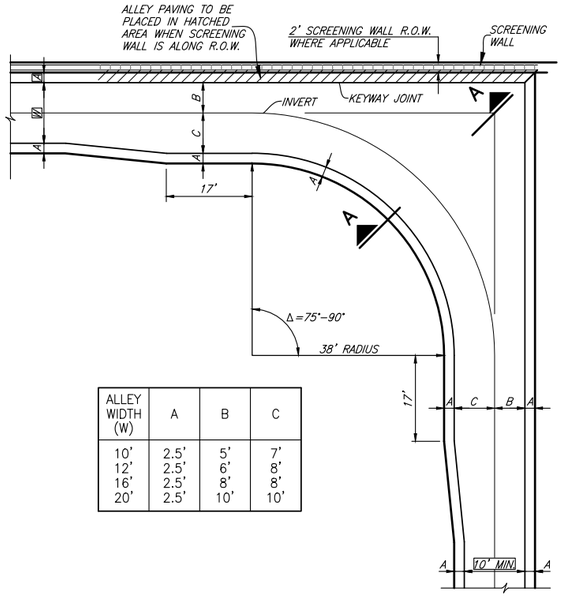

ALLEY WIDTH (W)	A	B	C
10'	2.5'	5'	7'
12'	2.5'	6'	8'
16'	2.5'	8'	8'
20'	2.5'	10'	10'

ALLEY TURN FOR Δ = 75°-90°

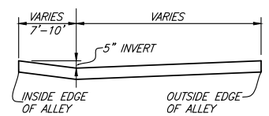

SECTION A-A

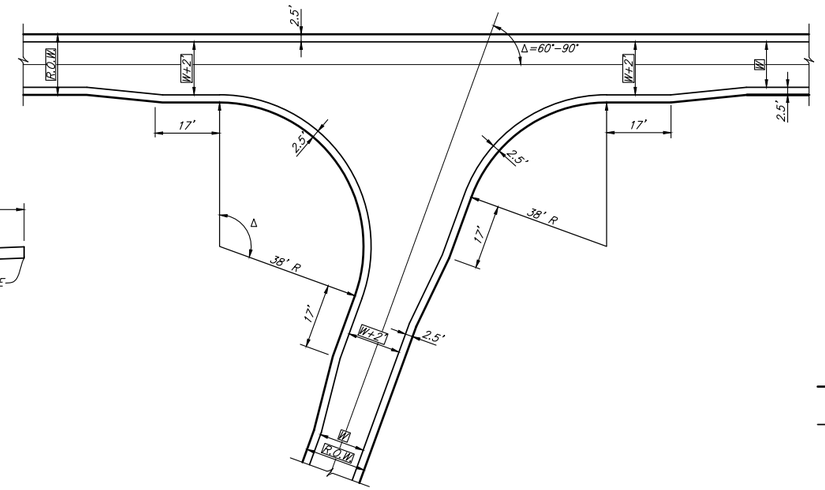

ALLEY TURN FOR Δ > 90°

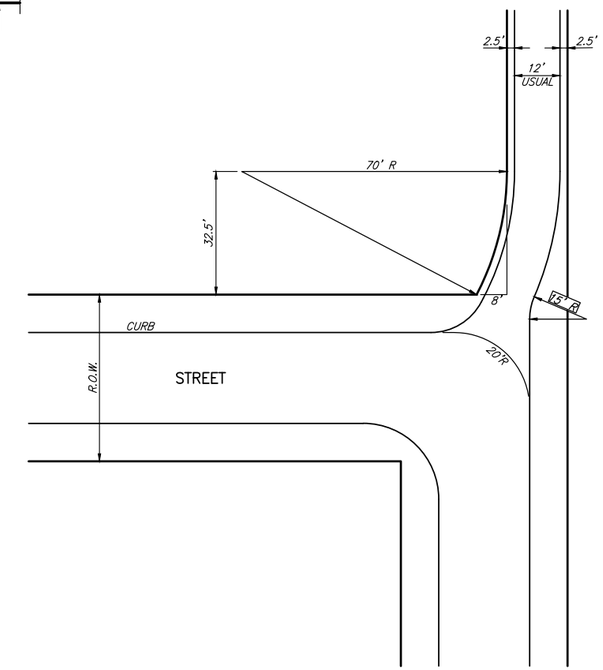

ALLEY / STREET INSERSECTION

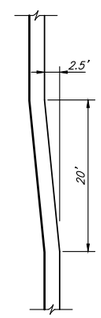

DETAIL "A"

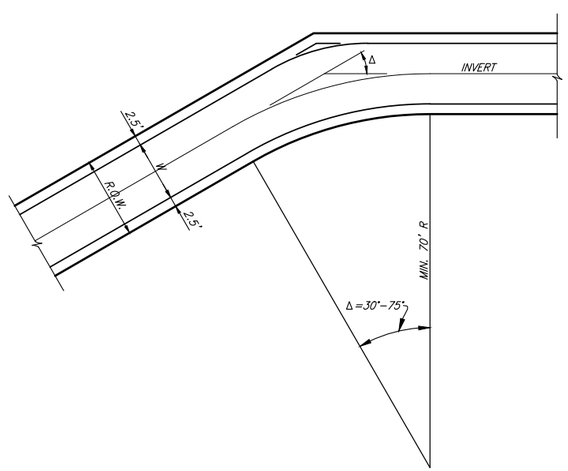

ALLEY TURN FOR Δ = 30°-75°

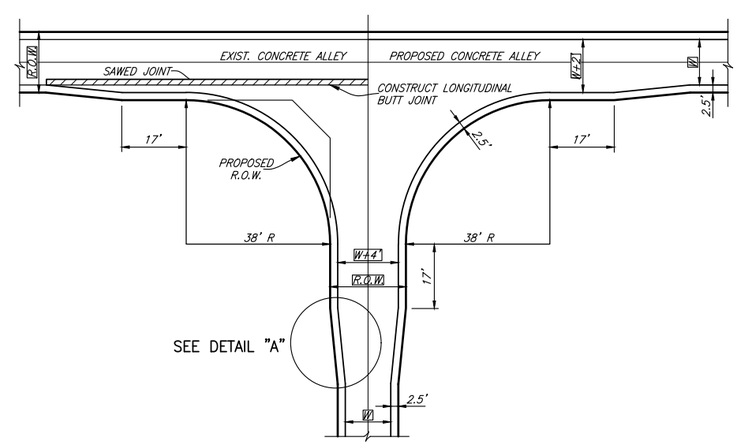

ALLEY INSERSECTING ALLEY

These plans and related specifications were prepared for construction of this specific project only. Reuse of these documents is not permitted without written authorization of Birkhoff, Hendricks & Carter, L.L.P. If this drawing is converted to an electronic file, if any discrepancy occurs between the electronic file and the Birkhoff, Hendricks & Carter, L.L.P. original document, the original document will govern in all cases.

BIRKHOFF, HENDRICKS & CARTER, L.L.P.
PROFESSIONAL ENGINEERS
TBPE Firm No. 526; TBPLS Firm No. 10031800
11910 Greenville Ave., Suite 600
Dallas, Texas 75243 (214) 361-7900

STATE OF TEXAS
JOE RICHARD CARTER
64008
REGISTERED PROFESSIONAL ENGINEER

Joe Richard Carter
3/25/2025

CITY OF AUBREY, TEXAS
DANE STREET IMPROVEMENTS AND CITY HALL PARKING IMPROVEMENTS

AUBREY DETAILS

BHC PROJECT NO. 2024-134

March, 2025

SHEET NO. **28**

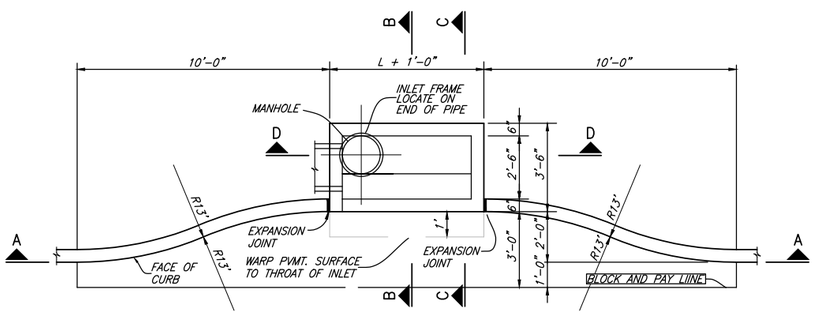

PLAN – RECESSED INLET

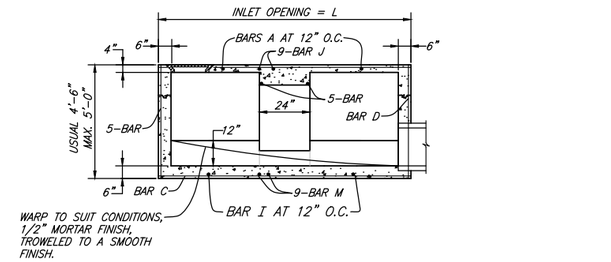

SECTION A–A – STANDARD AND RECESSED INLETS

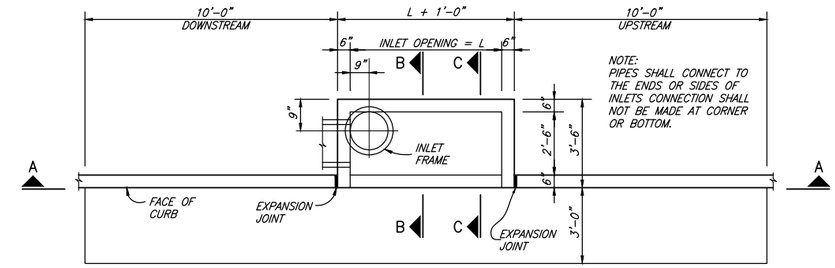

PLAN – STANDARD INLET
4, 6, 8 AND 10 FOOT INLETS

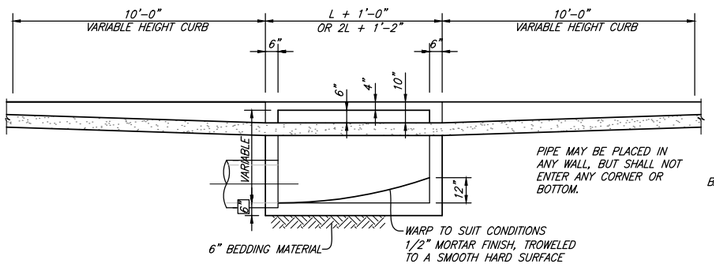

SECTION A–A–RECESSED AND STANDARD INLETS
4, 6, 8, AND 10 FOOT INLETS

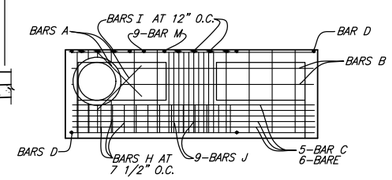

PLAN – STANDARD INLET

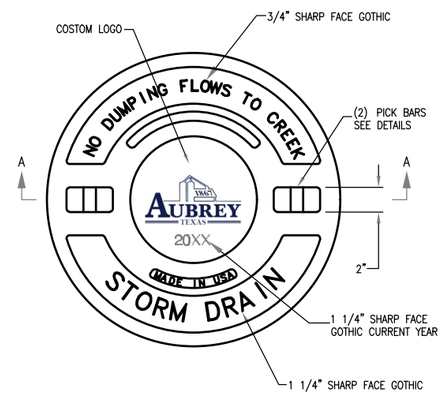

PLAN OF COVER

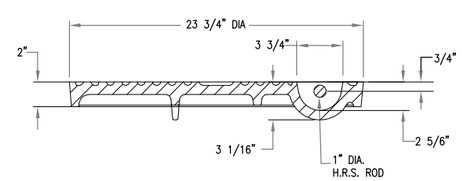

SECTION A–A OF COVER

STORM DRAIN INLET COVER

BASS & HAYS COVER PART# 30024C82LID OR EJ 2023A COVER,
BASS & HAYS FRAME PART# 28024R RING

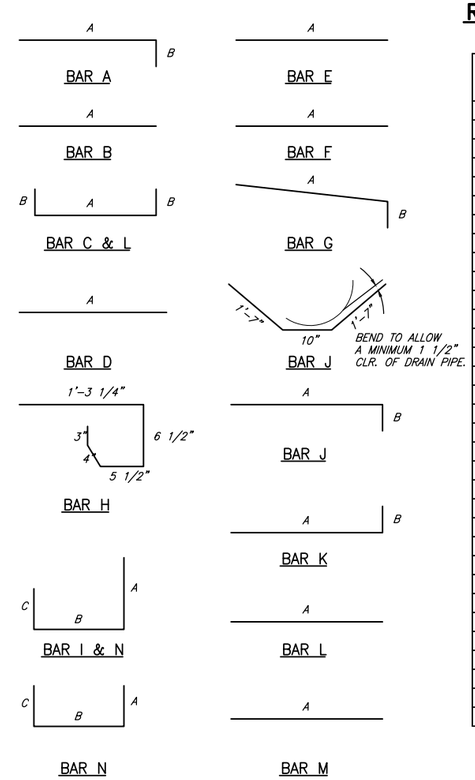

BAR DIAGRAMS

REINFORCING STEEL SCHEDULE

DIMENSIONS SHOWN ARE FOR MAXIMUM SIZE INLETS

INLET LENGTH	BAR TYPE	BAR DIA. (1/8 IN.)	NO. REQ'D	BAR DIMENSIONS		
				A	B	C
4	A	3	6	3'-2"	0'-3"	–
	B	3	1	2'-10"	–	–
	C	4	15	4'-8"	0'-6"	–
	D	4	5	4'-8"	–	–
	F	4	1	3'-2"	–	–
	G	3	5	2'-0"	1'-3"	–
	H	3	6	*	*	*
	N	3	3	3'-2"	3'-2"	3'-2"
6	A	3	9	3'-2"	0'-3"	–
	B	3	1	4'-10"	–	–
	C	4	15	6'-8"	0'-6"	–
	D	4	5	4'-8"	–	–
	F	4	1	3'-2"	–	–
	G	3	5	2'-0"	1'-3"	–
	H	3	9	*	*	*
	N	3	3	3'-2"	3'-2"	3'-2"
8	A	3	12	3'-2"	0'-3'	–
	B	4	1	6'-10"	–	–
	C	4	15	8'-8"	0'-6"	–
	D	4	5	4'-8"	–	–
	F	4	1	3'-2"	–	–
	G	3	5	2'-0'	1'-3"	–
	H	3	12	*	*	*
	N	3	3	3'-2"	3'-2"	3'-2"
10	A	3	13	3'-2"	0'-3'	–
	B	3	2	8'-10"	–	–
	C	4	16	10'-8"	0'-6"	–
	D	4	4	4'-8"	–	–
	E	5	6	10'-8"	–	–
	G	3	5	2'-0"	1'-3"	–
	H	3	14	*	*	*
	I	4	8	4'-8"	3'-2"	3'-2"
	L	4	5	4'-3"	–	–

* SEE DIAGRAM FOR DIMENSIONS. 4', 6', 8' AND 10' INLETS

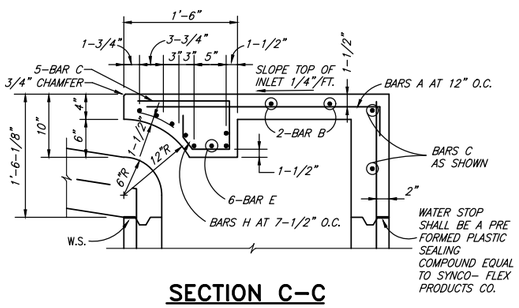

SECTION C–C

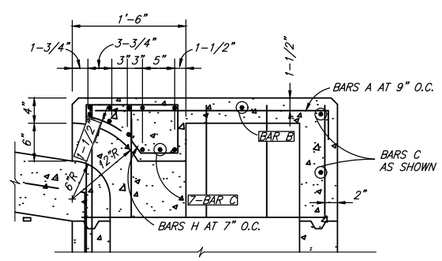

NOTE: FOR ADDITIONAL INFORMATION SEE SECTION C–C

SECTION E–E

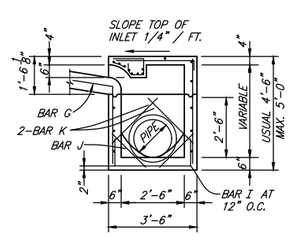

SECTION B–B

NOTES:

1. THE FLOOR OF THE EXCAVATION FOR INLET BOX MUST PROVIDE A FIRM, LEVEL BED FOR THE BASE SECTION TO REST UPON.
2. A MINIMUM OF 6 INCHES OF 1" DIAMETER (MAXIMUM) ROCK OR GRAVEL SHALL BE USED TO PREPARE THE BEDDING TO FINAL GRADE OR LIEU OF THIS, AT LEAST 6 INCHES OF 2–SACK CEMENT STABILIZED SAND SHALL BE USED TO PREPARE THE BEDDING TO GRADE. CEMENT STABILIZED–SAND SHALL BE ALLOWED TO SET BY KEEPING HOLE PUMPED DRY.
3. AFTER CASING HAS BEEN INSTALLED ON THE PROPER BEDDING, THE BACKFILL MATERIAL, WHICH IS FREE FLOWING AND CLEAR OF ROCKS, IN EXCESS OF 4" DIAMETER AND OTHER LUMPS WHICH WOULD PROHIBIT PROPER COMPACTION, SHALL BE COMMENCED IN LIFTS OF NO MORE THAN 18". THE MATERIAL USED FOR BACKFILL SHOULD BE A TYPE SUITABLE TO OBTAIN THE DENSITY REQUIREMENTS FOR THE SPECIFIC JOB.

These plans and related specifications were prepared for construction of this specific project only. Reuse of these documents is not permitted without written authorization of Birkhoff, Hendricks & Carter, L.L.P. If this drawing is converted to an electronic file, if any discrepancy occurs between the electronic file and the Birkhoff, Hendricks & Carter, L.L.P. original document, the original document will govern in all cases.

BIRKHOFF, HENDRICKS & CARTER, L.L.P.
PROFESSIONAL ENGINEERS
TBPE Firm No. 526; TBPLS Firm No. 10031800
11910 Greenville Ave., Suite 600
Dallas, Texas 75243 (214) 361-7900

STATE OF TEXAS
JOE RICHARD CARTER
64008
REGISTERED PROFESSIONAL ENGINEER

3/25/2025

CITY OF AUBREY, TEXAS
DANE STREET IMPROVEMENTS AND CITY HALL PARKING IMPROVEMENTS

AUBREY DETAILS

BHC PROJECT NO. 2024-134

March, 2025

SHEET NO. **29**

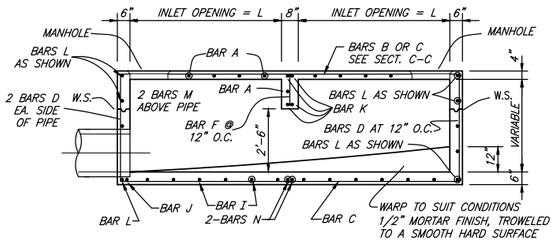

SECTION A–A

12, 14, 16 AND 20 FOOT INLETS

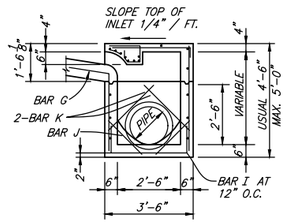

SECTION B–B

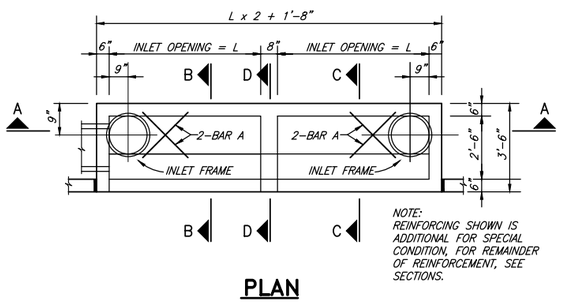

NOTE:
REINFORCING SHOWN IS ADDITIONAL FOR SPECIAL CONDITION, FOR REMAINDER OF REINFORCEMENT, SEE SECTIONS.

PLAN

20 FOOT INLETS

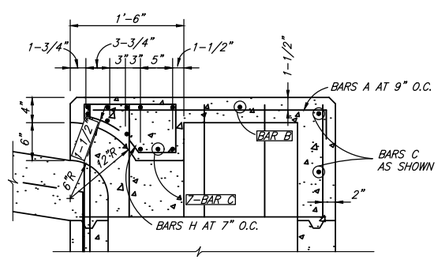

NOTE: FOR ADDITIONAL INFORMATION SEE SECTION C–C

SECTION D–D

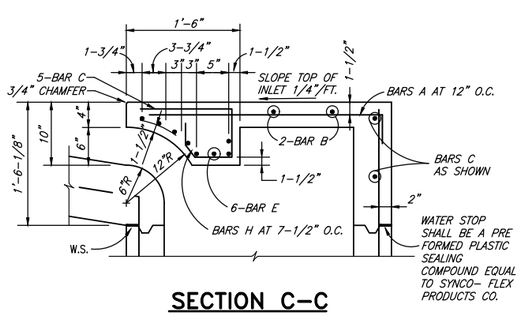

SECTION C–C

DOUBLE INLETS

DIMENSIONS SHOWN ARE FOR MAXIMUM SIZE INLETS

INLET LENGTH	BAR TYPE	BAR DIA. (1/8 IN.)	NO. REQ'D	BAR DIMENSIONS		
				A	B	C
6 FT.	A	3	15	3'–2"	0'–6"	–
	B	3	2	11'–6"	–	–
	C	4	16	13–4"	0'–6"	–
	D	4	9	4'–8"	–	–
	E	5	6	13–4"	–	–
	F	4	5	1'–2"	–	–
	G	3	12	2'–0"	1'–3"	–
	H	3	26	*	*	*
	I	4	12	4'–8"	3'–2"	3'–2"
	J	5	1	*	*	*
	K	5	6	3'–2"	0'–6"	–
	L	4	11	3'–2"	0'–6"	–
	M	4	2	3'–0" **	–	–
	N	4	2	4'–8"	3'–2"	4'–8"
7 FT.	A	3	17	3'–2"	0'–6"	–
	B	3	2	13'–6"	–	–
	C	4	16	15'–4"	0'–3'	–
	D	4	9	4'–8"	–	–
	E	5	6	15'–4"	–	–
	F	4	5	1'–2"	–	–
	G	3	15	2'–0"	1'–3"	–
	H	3	32	*	*	*
	I	4	14	4'–8"	3'–2"	3'–2"
	J	5	1	*	*	*
	K	5	6	3'–2"	0'–6"	–
	L	4	11	3'–2"	0'–6"	–
	M	4	2	3'–0" **	–	–
	N	4	2	4'–8"	3'–2"	4'–8"
8 FT.	A	3	19	3'–2"	0'–6"	–
	B	3	2	15'–6"	–	–
	C	4	16	17'–4"	0'–6"	–
	D	4	9	4'–8"	–	–
	E	5	6	17'–4"	–	–
	F	4	5	1'–2"	–	–
	G	3	12	2'–0"	1'–3"	–
	H	3	26	*	*	*
	I	4	16	4'–8"	3'–2"	3'–2"
	J	5	1	*	*	*
	K	5	6	3'–2"	0'–6"	–
	L	4	11	3'–2"	0'–6"	–
	M	4	2	3'–0" **	–	–
	N	4	2	4'–8"	3'–2"	4'–8"
10 FT.	A	3	23	3'–2"	0'–6"	–
	B	3	2	19'–6"	–	–
	C	4	16	21'–4"	0'–6"	–
	D	4	9	4'–8"	–	–
	E	5	6	21'–4"	–	–
	F	4	5	1'–2"	–	–
	G	3	15	2'–0"	1'–3"	–
	H	3	32	*	*	*
	I	4	20	4'–8"	3'–2"	3'–2"
	J	5	1	*	*	*
	K	5	6	3'–2"	0'–6"	–
	L	4	11	3'–2"	0'–6"	–
	M	4	2	3'–0" **	–	–
	N	4	2	4'–8"	3'–2"	4'–8"

* SEE DIAGRAM FOR DIMENSIONS.
** FIELD CUT AS REQUIRED TO ACCOMMODATE DRAIN PIPE
16' AND 20' INLETS

REINFORCING STEEL SCHEDULE

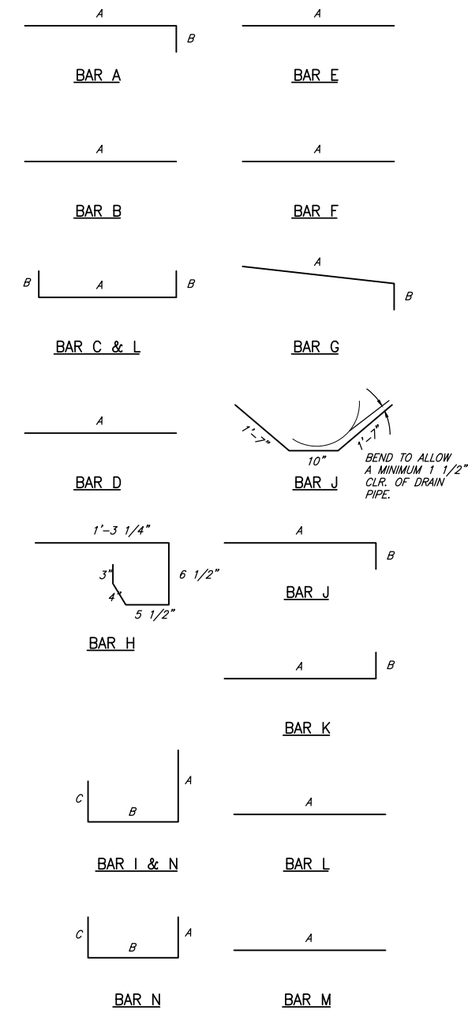

△ BEND TO ALLOW A MINIMUM 1 1/2" CIR. OF DRAIN PIPE
* SEE DIAGRAMS FOR DIMENSIONS
** FIELD CUT AS REQUIRED TO ACCOMODATE DRAIN PIPE

BAR BENDING DIAGRAMS

These plans and related specifications were prepared for construction of this specific project only. Reuse of these documents is not permitted without written authorization of Birkhoff, Hendricks & Carter, L.L.P. If this drawing is converted to an electronic file, if any discrepancy occurs between the electronic file and the Birkhoff, Hendricks & Carter, L.L.P. original document, the original document will govern in all cases.

BIRKHOFF, HENDRICKS & CARTER, L.L.P.
PROFESSIONAL ENGINEERS
TBPE Firm No. 526; TBPLS Firm No. 10031800
11910 Greenville Ave., Suite 600
Dallas, Texas 75243 (214) 361-7900

STATE OF TEXAS
JOE RICHARD CARTER
64008
REGISTERED PROFESSIONAL ENGINEER

Joe Richard Carter
3/25/2025

CITY OF AUBREY, TEXAS
DANE STREET IMPROVEMENTS AND CITY HALL PARKING IMPROVEMENTS

AUBREY DETAILS

BHC PROJECT NO. 2024-134

March, 2025

SHEET NO. **30**

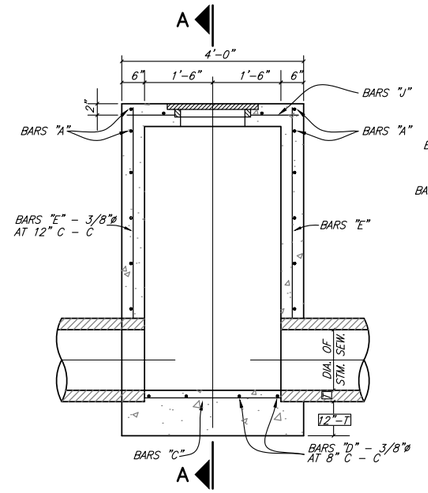

ELEVATION

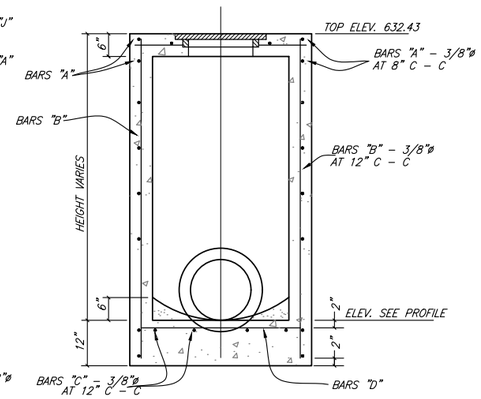

SECTION A–A

STORM SEWER TYPE A MANHOLE

MAX. PIPE SIZE 30"

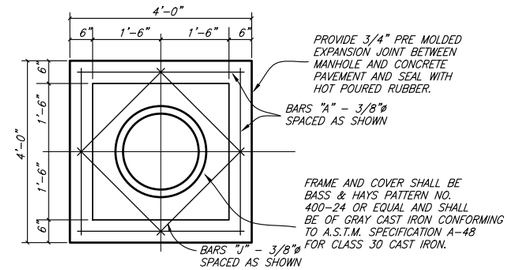

TOP PLAN
TYPE A & TYPE B
STORM SEWER MANHOLE

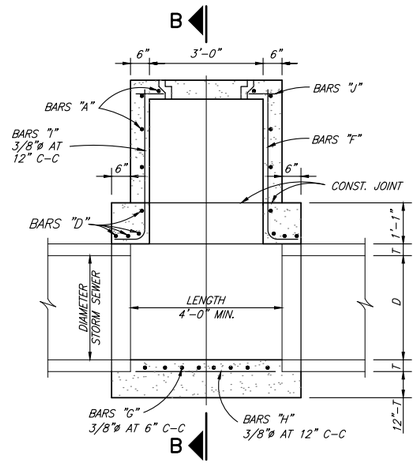

ELEVATION

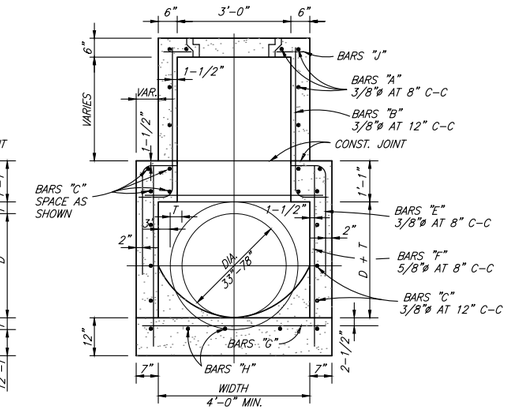

SECTION B–B

TYPE B STORM SEWER MANHOLE

MAX. PIPE SIZE 78"

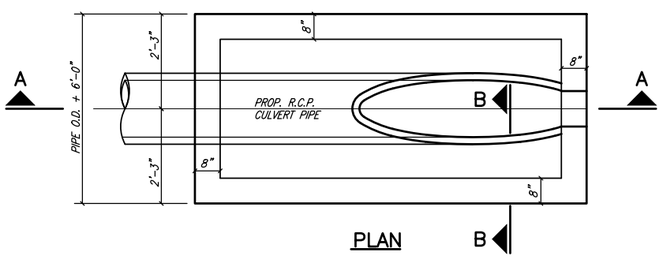

PLAN

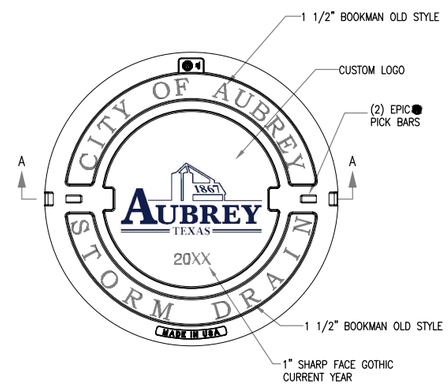

PLAN OF STORM DRAIN COVER

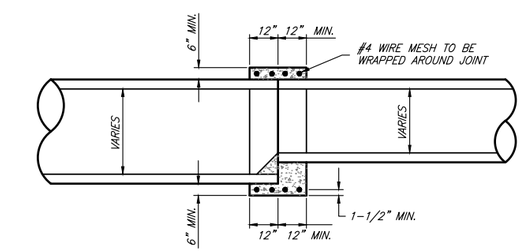

DETAIL OF CONCRETE COLLAR FOR R.C.P. OR R.C.A.P. CONNECTIONS

INSIDE JOINT SHALL BE CONCRETE MORTAR

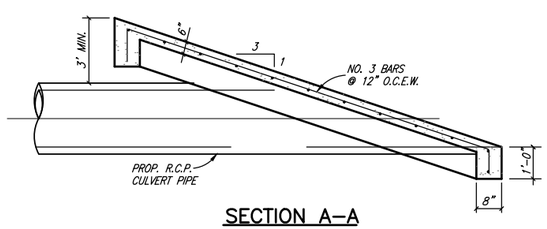

SECTION A–A

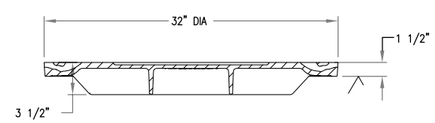

SECTION A–A OF COVER

STORM DRAIN INLET COVER

BASS & HAYS COVER, PART# VRM30–LID98 OR EJ 1408A1 COVER,
BASS & HAYS FRAME, PART# VRM30 RING

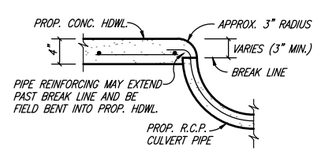

SECTION B–B

SLOPED CONCRETE HEADWALL

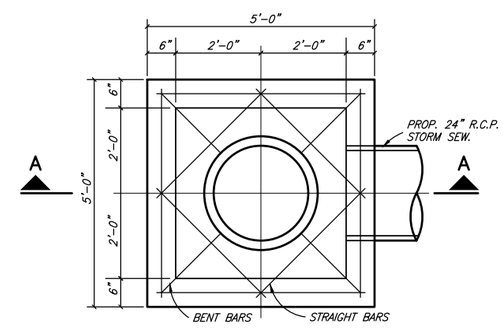

PLAN

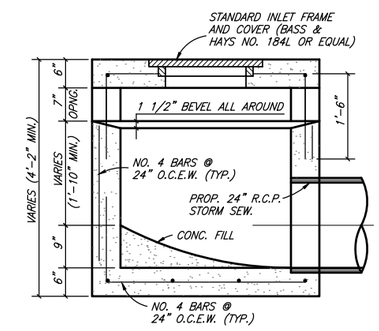

SECTION A–A

STANDARD DROP INLET

These plans and related specifications were prepared for construction of this specific project only. Reuse of these documents is not permitted without written authorization of Birkhoff, Hendricks & Carter, L.L.P. If this drawing is converted to an electronic file, if any discrepancy occurs between the electronic file and the Birkhoff, Hendricks & Carter, L.L.P. original document, the original document will govern in all cases.

BIRKHOFF, HENDRICKS & CARTER, L.L.P.
PROFESSIONAL ENGINEERS
TBPE Firm No. 526; TBPLS Firm No. 10031800
11910 Greenville Ave., Suite 600
Dallas, Texas 75243 (214) 361-7900

STATE OF TEXAS
JOE RICHARD CARTER
64008
REGISTERED PROFESSIONAL ENGINEER

Joe Richard Carter
3/25/2025

CITY OF AUBREY, TEXAS
DANE STREET IMPROVEMENTS AND CITY HALL PARKING IMPROVEMENTS

AUBREY DETAILS

BHC PROJECT NO. 2024-134

March, 2025

SHEET NO. **31**

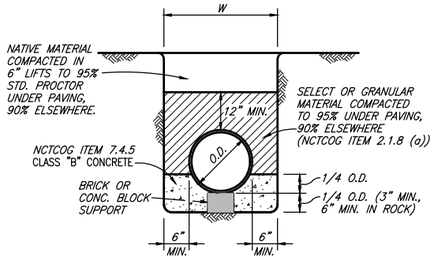

CLASS A EMBEDMENT

CONCRETE CRADLE

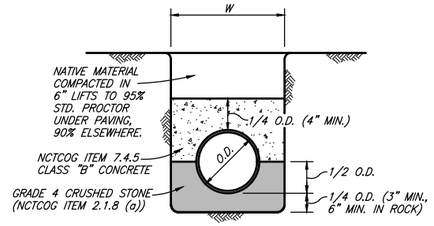

CLASS A–1 EMBEDMENT

CONCRETE CAP

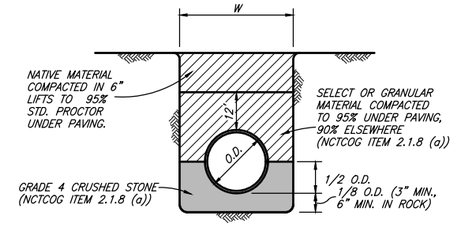

CLASS B+ EMBEDMENT

STD PVC WATER

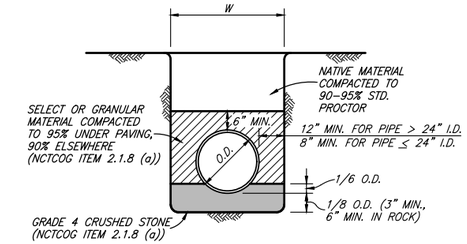

CLASS C EMBEDMENT

STD. DUCTILE IRON WATER OR SEWER
STD. R.C.C.P. WATER
STD. STORM SEWER

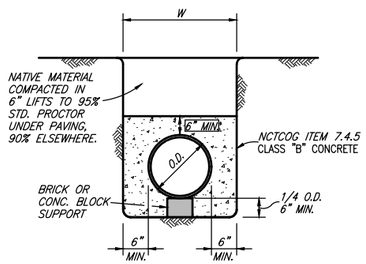

CLASS G EMBEDMENT

CONCRETE ENCASEMENT

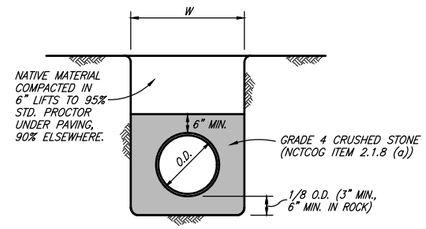

CLASS H EMBEDMENT

P.V.C. PIPE ONLY
STD. P.V.C. SEWER

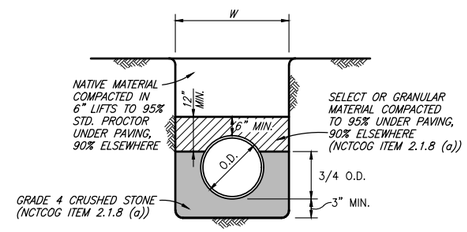

CLASS B–1 EMBEDMENT

P.V.C. PIPE ONLY
STD. P.V.C. WATER

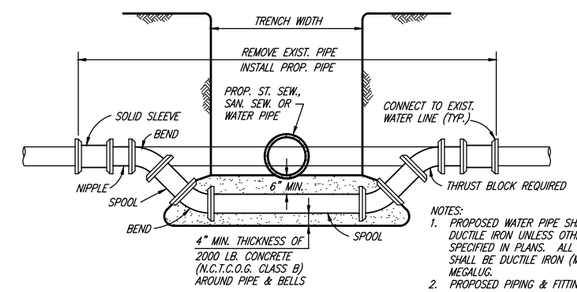

NOTES:
1. PROPOSED WATER PIPE SHALL BE DUCTILE IRON UNLESS OTHERWISE SPECIFIED IN PLANS. ALL FITTINGS SHALL BE DUCTILE IRON (M.J.–P.E.) MEGALUG.
2. PROPOSED PIPING & FITTINGS ARE SYMMETRIC ABOUT CENTER OF PROP. SAN. SEW. OR ST. SEW. PIPE AND SHALL RETAIN TEST PRESSURES.
3. ALL THRUST BLOCKING SHALL BE SUBSIDIARY TO UNIT PRICE.
4. CROSSING OF SANITARY SEWER SHALL BE IN ACCORDANCE WITH T.N.R.C.C. REQUIREMENTS.

WATER MAIN LOWERING

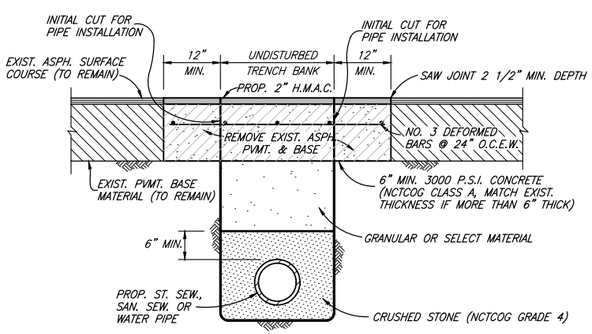

ASPHALT STREET OR DRIVEWAY REPAIR

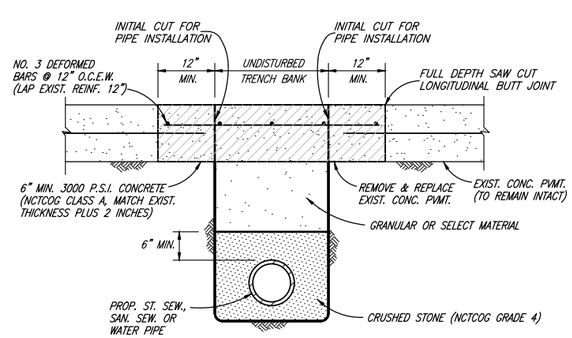

CONCRETE STREET OR DRIVEWAY REPAIR

GRADE 4 CRUSHED STONE GRADATION

SIEVE SIZE	% RETAINED
1–1/2 INCH	0
1 INCH	0–5
1/2 INCH	40–75
NO. 4	90–100
NO. 8	95–100

These plans and related specifications were prepared for construction of this specific project only. Reuse of these documents is not permitted without written authorization of Birkhoff, Hendricks & Carter, L.L.P. If this drawing is converted to an electronic file, if any discrepancy occurs between the electronic file and the Birkhoff, Hendricks & Carter, L.L.P. original document, the original document will govern in all cases.

BIRKHOFF, HENDRICKS & CARTER, L.L.P.
PROFESSIONAL ENGINEERS
TBPE Firm No. 526; TBPLS Firm No. 10031800
11910 Greenville Ave., Suite 600
Dallas, Texas 75243 (214) 361-7900

STATE OF TEXAS
JOE RICHARD CARTER
64008
REGISTERED PROFESSIONAL ENGINEER

Joe Richard Carter
3/25/2025

CITY OF AUBREY, TEXAS
DANE STREET IMPROVEMENTS AND CITY HALL PARKING IMPROVEMENTS

AUBREY DETAILS

BHC PROJECT NO. 2024-134

March, 2025

SHEET NO. **32**

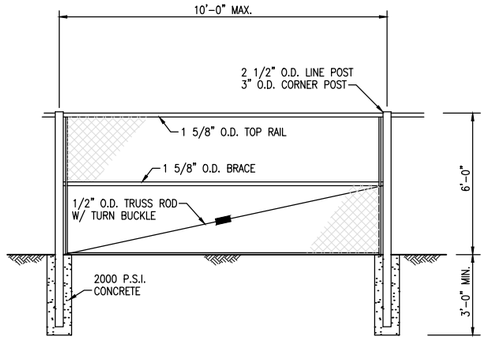

FENCE DETAIL

NO SCALE

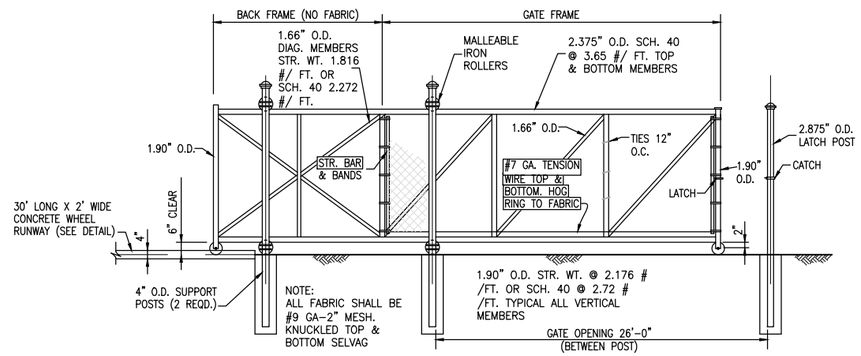

SLIDE GATE DETAIL

NO SCALE

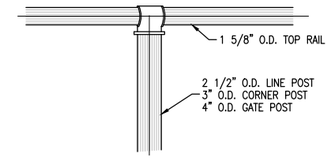

FENCE TOP

NO SCALE

NOTES:
1. GATE TO BE CYCLONE STANDARD CANTILEVER SLIDE GATE OR APPROVED EQUAL.
2. ALL FENCE FABRIC SHALL HAVE A BLACK P.V.C. COATING.
3. CONTRACTOR SHALL FURNISH AND INSTALL AN AUTOMATIC GATE OPERATOR (STANLEY MODEL 580 GEAR HEAD, A STANLEY 320-0720 DIGITAL KEYLESS ENTRY, A STANLEY 320-0716 INTERCOM, A STANLEY 420-0888 MAGNETIC VEHICLE DETECTOR (FOR OUTGOING VEHICLES), A STANLEY 420-0555 AND 420-0779 TIME DELAY SYSTEM. ALL EXTERIOR MOUNTING OF EQUIPMENT SHALL BE IN WEATHERPROOF ENCLOSURES.

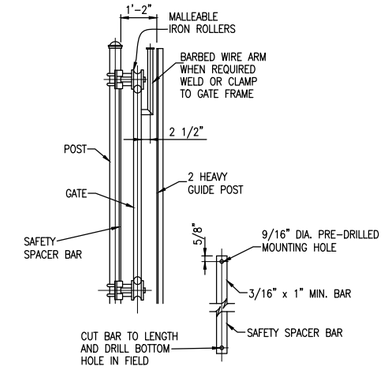

ROLLER DETAIL

NO SCALE

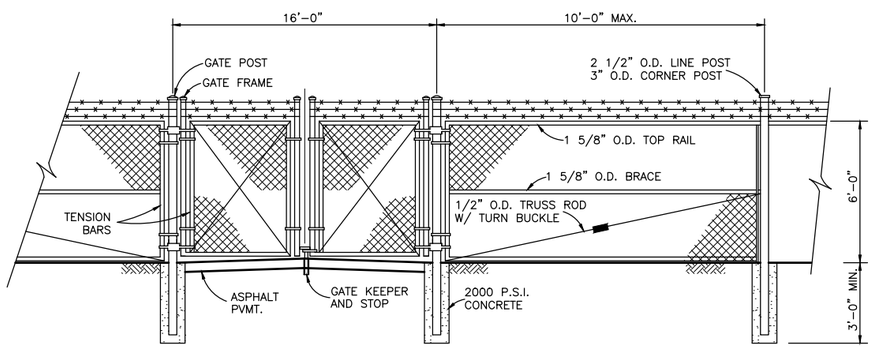

GATE DETAIL

N.T.S.

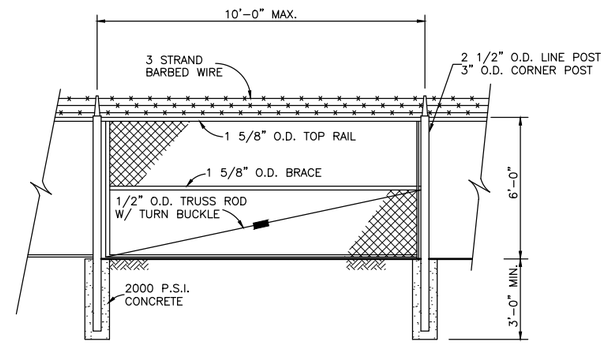

FENCE DETAIL

N.T.S.

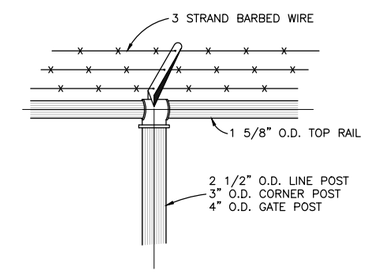

FENCE TOP

N.T.S.

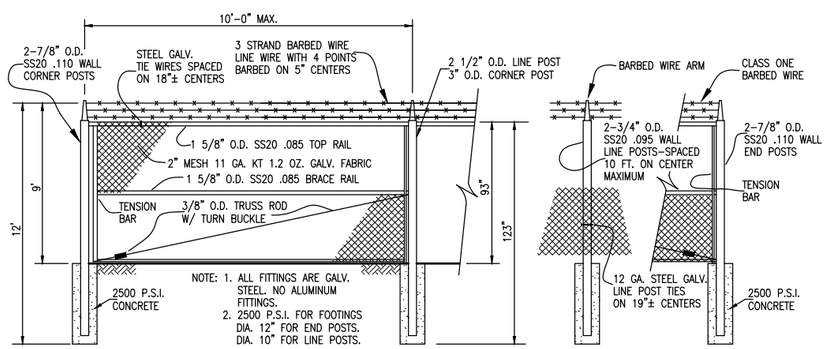

8 FOOT CHAIN LINK FENCE DETAIL

N.T.S.

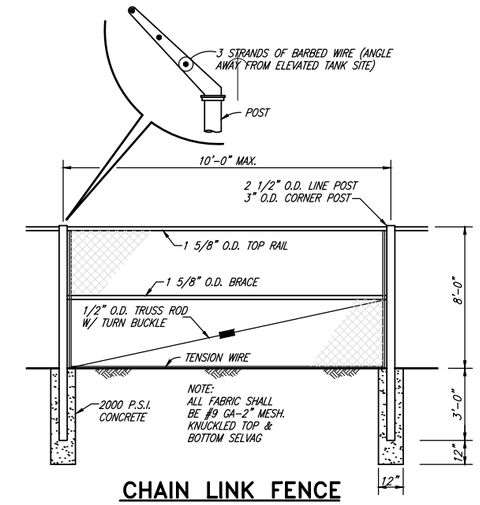

CHAIN LINK FENCE

NO SCALE

These plans and related specifications were prepared for construction of this specific project only. Reuse of these documents is not permitted without written authorization of Birkhoff, Hendricks & Carter, L.L.P. If this drawing is converted to an electronic file, if any discrepancy occurs between the electronic file and the Birkhoff, Hendricks & Carter, L.L.P. original document, the original document will govern in all cases.

BIRKHOFF, HENDRICKS & CARTER, L.L.P.
PROFESSIONAL ENGINEERS
TBPE Firm No. 526; TBPLS Firm No. 10031800
11910 Greenville Ave., Suite 600
Dallas, Texas 75243 (214) 361-7900

STATE OF TEXAS
JOE RICHARD CARTER
64008
REGISTERED PROFESSIONAL ENGINEER

3/25/2025

CITY OF AUBREY, TEXAS
DANE STREET IMPROVEMENTS AND CITY HALL PARKING IMPROVEMENTS

AUBREY DETAILS

BHC PROJECT NO. 2024-134

March, 2025

SHEET NO. **33**

DISCLAIMER:
The use of this standard is governed by the "Texas Engineering Practice Act". No warranty of any kind is made by TxDOT for any purpose whatsoever. TxDOT assumes no responsibility for the conversion of this standard to other formats or for incorrect results or damages resulting from its use.

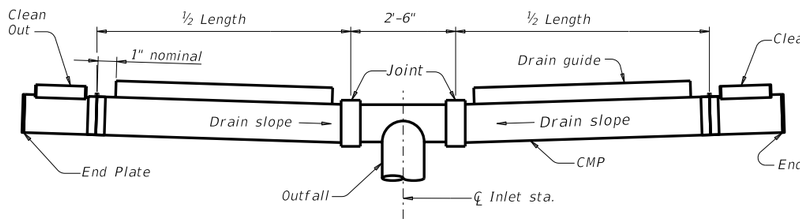

TYPICAL TYPE "T" DRAIN INSTALLATION

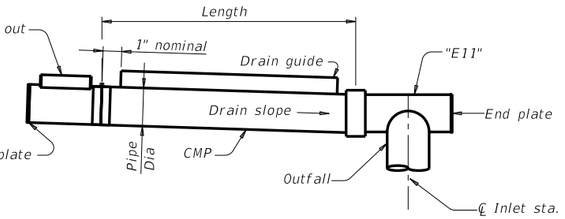

TYPICAL TYPE "L" DRAIN INSTALLATION

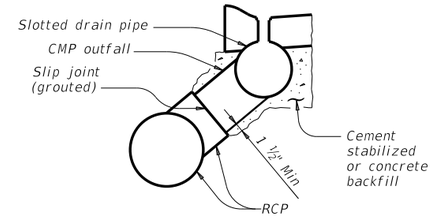

BACKFILL DETAIL AT OUTFALL

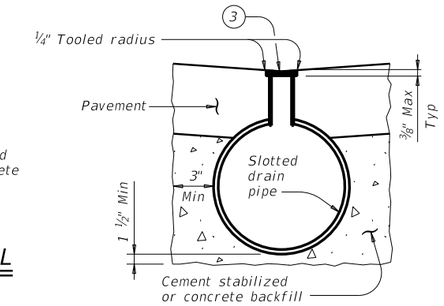

TYPICAL BACKFILL DETAIL

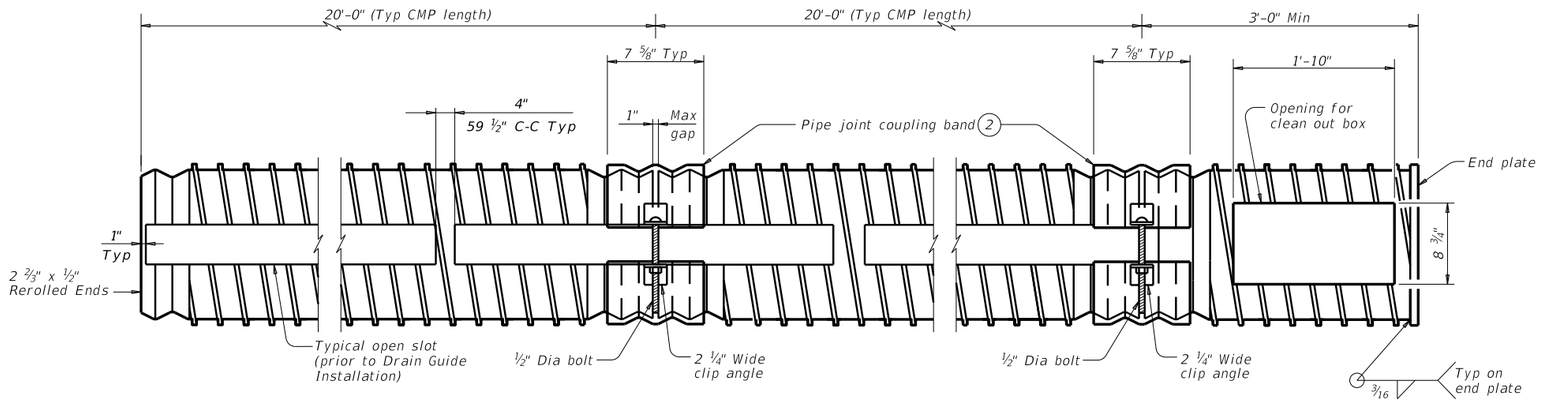

SLOTTED CORRUGATED METAL PIPE (CMP) DETAIL 1

Showing Type IR pipe

1. Provide 16 gauge (Min) x 12" to 36" Dia Corrugated Metal Pipe (Type I ~ 2 ⅔" x ½" corrugations or Type IR ~ ¾" x ¾" x 7 ½" corrugations)
2. Alternate methods of joining lengths of pipe, as recommended by the manufacturer, may be used with the approval of the Engineer.
3. Wood Strip (Nom ⅜" Max x 2 ½"). Wood strip may be omitted if suitable protection is provided during pavement placement.
4. Install frame and grate flush with pavement and centered over clean out box.
5. See pavement details for slab thickness.

FABRICATION NOTES:

Provide circular corrugated steel pipe, galvanized or aluminized, in accordance with Item 460, "Corrugated Metal Pipe."

Provide drain guide assemblies conforming to Item 474, "Linear Drains."

Fabricate bearing bars, cross bar spacers, end plates, and clean out boxes from 3/16" plate, ASTM A36. Galvanize in accordance with Item 445, "Galvanizing."

Furnish slotted drain in 20'-0" lengths, when practical, to minimize number of joints.

Furnish pedestrian cap when specified in the plans.

INSTALLATION NOTES:

Backfill trenches for slotted drains and outfall pipe with low strength concrete (minimum 2 sacks or cement per cubic yard) or cement stabilized backfill as shown or directed by the Engineer.

Place suitable compressible material in the outfall connection slip joint, to retain grout during curing.

Provide heavy duty frame and grate from one of the following, or approved equal (clear opening 22" x 8 ¾" Min, 25 ½" x 12 Max).

- Neenah R-3471
- EJ V-4274
- USF 4621 frame and 6296 grate

GENERAL NOTES:

Unless otherwise shown on the plans, the Contractor may furnish any of the designs as shown.

Frame and grate is subsidiary to Slotted Drain.

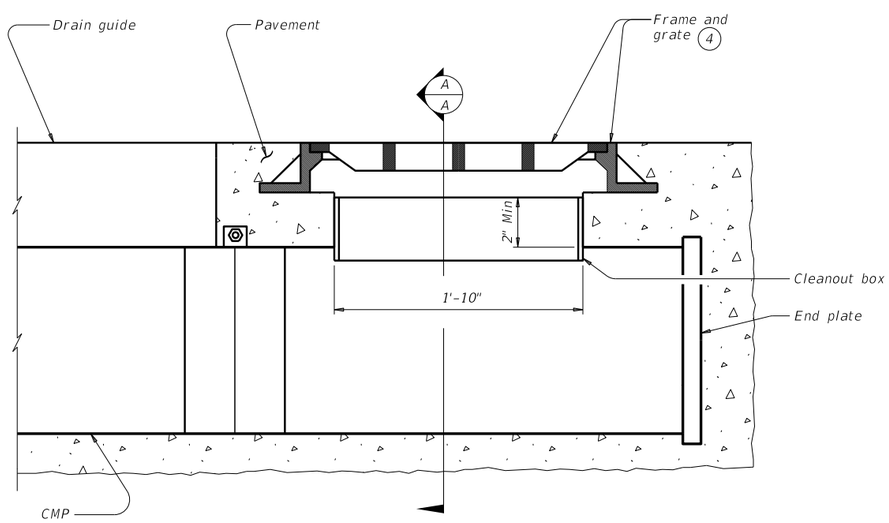

CLEAN OUT BOX ELEVATION

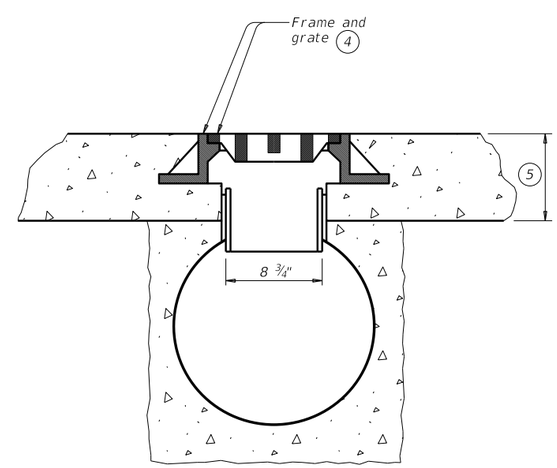

SECTION A-A

SHEET 1 OF 2

Texas Department of Transportation — Bridge Division Standard

ROADWAY LINEAR DRAIN (SLOTTED DRAIN)

SD

FILE: CD-SD-20.dgn	DN: TxDOT	CK: TxDOT	DW: DKC	CK: AES
©TxDOT February 2020	CONT	SECT	JOB	HIGHWAY
REVISIONS	DIST		COUNTY	SHEET NO.

DATE:
FILE:

DISCLAIMER:
The use of this standard is governed by the "Texas Engineering Practice Act". No warranty of any kind is made by TxDOT for any purpose whatsoever.
TxDOT assumes no responsibility for the conversion of this standard to other formats or for incorrect results or damages resulting from its use.

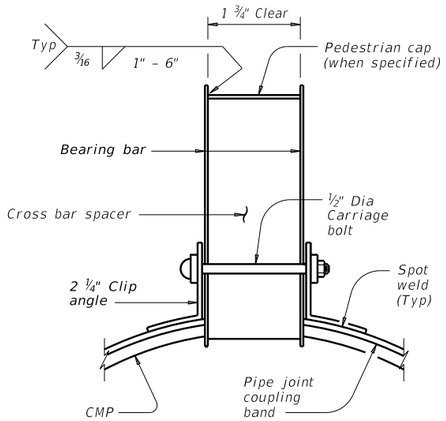

PIPE JOINT CONNECTION TRANSVERSE SECTION

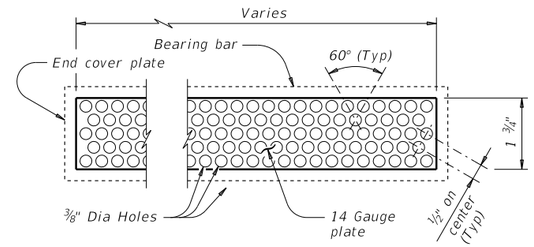

PEDESTRIAN CAP DETAIL

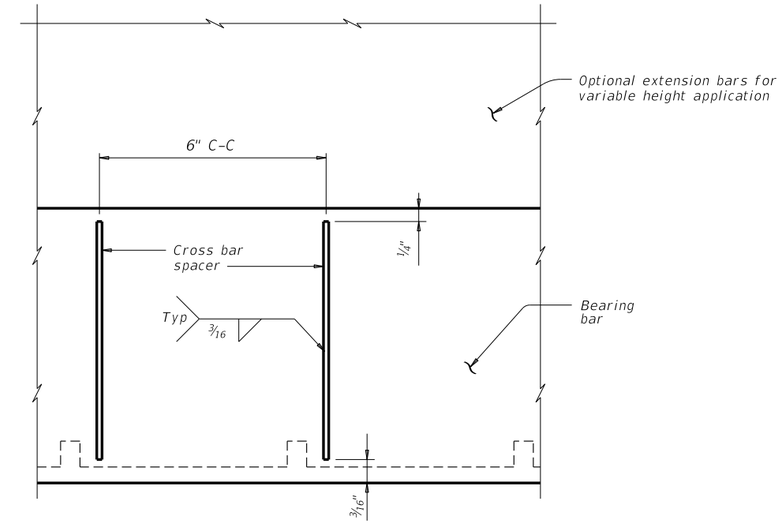

SECTION B-B (WITH RECTANGULAR SPACERS)

Showing installation of cross bar spacers in longitudinal section.

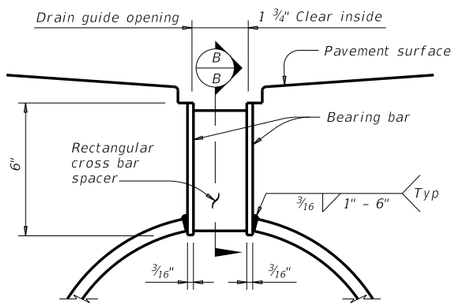

STANDARD HEIGHT

Showing rectangular spacers.

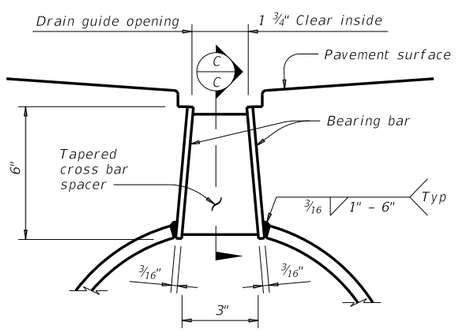

STANDARD HEIGHT

Showing tapered spacers.

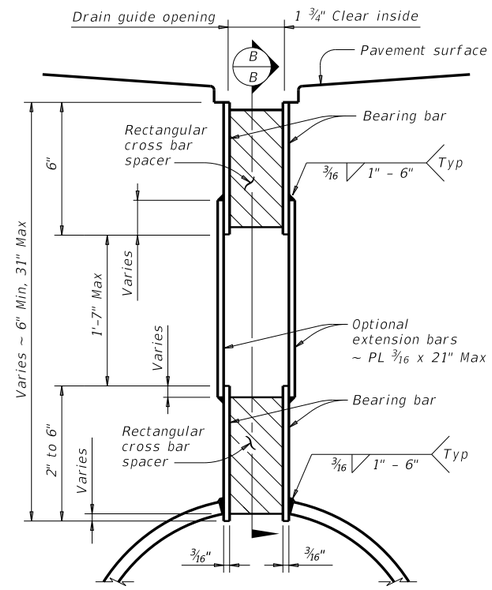

VARIABLE HEIGHT

Showing rectangular spacers and extension.

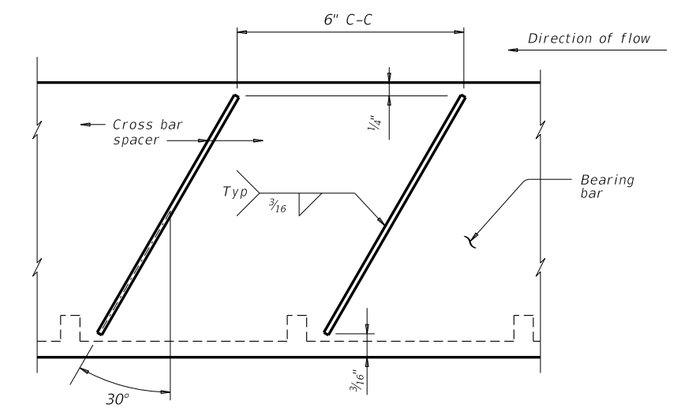

SECTION C-C (WITH TAPERED SPACERS)

Showing installation of cross bar spacers in longitudinal section.

TYPICAL SECTIONS THRU DRAIN GUIDE INSTALLATION

SHEET 2 OF 2

Texas Department of Transportation — Bridge Division Standard

ROADWAY LINEAR DRAIN (SLOTTED DRAIN)

SD

FILE: CD-SD-20.dgn	DN: TxDOT	CK: TxDOT	DW: DKC	CK: AES
©TxDOT February 2020	CONT	SECT	JOB	HIGHWAY
REVISIONS				
	DIST	COUNTY		SHEET NO.

DATE:
FILE:

CITY OF AUBREY, TEXAS
DANE STREET IMPROVEMENTS

BID SUMMARY
Bids Received at 2:00 p.m., Monday, April 21, 2024

	Contractor	Total Amount Bid
1.	J & L Construction, LLC 2220 San Jacinto Blvd., Suite 320 Denton, TX 76205 Luis Asencio 940-629-3571	$ 717,240.50
2.	Pace Construction Services, LLC 1904 Thornberry Dr. Melissa, TX 75454 Paul Anderson 972-832-9253	$ 820,371.00
3.	Vlex Construction LLC 3586 Bent Oak E. St. Greenville, TX 75401 Vijay Bheemireddy 469-422-1832	$ 894,767.00
4.	King George Traffic Solution, LLC 8330 US 67 Building C Alvarado, TX 76009 Mike Moore 214-232-1772	$ 1,069,889.20
5.	BCR2, LLC 195 Murray Farm Rd. Fairview, TX 75069 David Losburn 972-670-4745	$ 1,085,877.56
6.	Quality Excavation, LLC 104 Redfearn Road Aubrey, TX 76227 Jason Wilson 940-365-0800	$ 1,154,360.00

TABULATION OF BIDS

Date: April 21, 2024 @ 2:00 P.M.

Project: CITY OF AUBREY, TEXAS
DANE STREET IMPROVEMENTS AND
CITY HALL PARKING IMPROVEMENTS

BIRKHOFF, HENDRICKS & CARTER, L.L.P.
PROFESSIONAL ENGINEERS
Dallas, Texas

Item No.	Approximate Quantities	Unit	Description	BID OF J & L Construction, LLC, 2220 San Jacinto Blvd., Suite 320, Denton, TX 76205, Luis Asencio, 940-629-3571, gabriel@constructionjandl.com		BID OF Pace Construction Services, LLC, 1904 Thornberry Dr., Melissa, TX 75454, Paul Anderson, 972-832-9253		BID OF Vlex Construction LLC, 3586 Bent Oak E. St., Greenville, TX 75401, Vijay Bheemireddy, 469-422-1832, vijay@vlexconstruction.com		BID OF King George Traffic Solution, LLC, 8330 US 67 Building C, Alvarado, TX 76009, Mike Moore, 214-232-1772, mike.moreekinggeorge.us		BID OF BCR2, LLC, 195 Murray Farm Rd., Fairview, TX 75069, David Losburn, 972-670-4745, dave@bcr2.com		BID OF Quality Excavation, LLC, 104 Redfearn Road, Aubrey, TX 76227, Jason Wilson, 940-365-0800, jason@qualityexcavationltd.com	
				Unit Bid Price	Extension	Unit Bid Price	Extension	Unit Bid Price	Extension	Unit Bid Price	Extension	Unit Bid Price	Extension	Unit Bid Price	Extension
100	1	L.S.	For Mobilization, Bonds, Insurance & Shop Drawings Dane Street (Max 5% Other Items)	$21,221.00	$ 21,221.00	$10,000.00	$ 10,000.00	$24,000.00	$ 24,000.00	$28,000.00	$ 28,000.00	$29,933.55	$ 29,933.55	$29,488.00	$ 29,488.00
101	6	Sta.	For Preparing Dane Street Right-of-Way, including Clearing & Grubbing and Gravel Pavement & Drive Removal	$227.00	$ 1,362.00	$4,000.00	$ 24,000.00	$3,600.00	$ 21,600.00	$17,870.00	$ 107,220.00	$1,500.00	$ 9,000.00	$3,226.00	$ 19,356.00
102	705	C.Y.	For Unclassified Excavation	$20.00	$ 14,100.00	$25.00	$ 17,625.00	$34.00	$ 23,970.00	$30.00	$ 21,150.00	$36.00	$ 25,380.00	$34.00	$ 23,970.00
103	47	S.Y.	Remove and Properly Dispose of Exist. HMAC Street & Drive Pvmt.	$21.00	$ 987.00	$60.00	$ 2,820.00	$22.00	$ 1,034.00	$30.00	$ 1,410.00	$25.00	$ 1,175.00	$40.00	$ 1,880.00
104	224	L.F.	Remove and Replace Existing Chain Link Fence	$18.00	$ 4,032.00	$80.00	$ 17,920.00	$96.00	$ 21,504.00	$28.00	$ 6,272.00	$50.00	$ 11,200.00	$78.00	$ 17,472.00
105	170	L.F.	Remove and Replace Existing Wood Privacy Fence	$87.00	$ 14,790.00	$105.00	$ 17,850.00	$60.00	$ 10,200.00	$45.00	$ 7,650.00	$70.00	$ 11,900.00	$103.00	$ 17,510.00
106	3	Ea.	Remove and Reset Mailboxes	$229.00	$ 687.00	$250.00	$ 750.00	$360.00	$ 1,080.00	$300.00	$ 900.00	$900.00	$ 2,700.00	$1,004.00	$ 3,012.00
107	2,257	S.Y.	Construct 6-inch Type A Grade 2 Flexible Base	$19.00	$ 42,883.00	$26.00	$ 58,682.00	$31.00	$ 69,967.00	$14.50	$ 32,726.50	$26.00	$ 58,682.00	$57.00	$ 128,649.00
108	2,104	S.Y.	Construct 6-inch Thick Reinforced Concrete Pavement (3600 psi)	$76.00	$ 159,904.00	$65.00	$ 136,760.00	$84.00	$ 176,736.00	$90.00	$ 189,360.00	$80.00	$ 168,320.00	$86.00	$ 180,944.00
109	124	S.Y.	Construct 6-inch Thick Reinforced Concrete Driveway on 6-inch Compacted Subgrade	$83.00	$ 10,292.00	$150.00	$ 18,600.00	$84.00	$ 10,416.00	$125.00	$ 15,500.00	$82.00	$ 10,168.00	$93.00	$ 11,532.00
110	1,200	L.F.	Construct Monolithic 6-inch Reinforced Concrete Curb	$11.00	$ 13,200.00	$1.00	$ 1,200.00	$7.00	$ 8,400.00	$8.00	$ 9,600.00	$8.00	$ 9,600.00	$38.00	$ 45,600.00
111	5,337	S.F.	Construct 4-inch Thick Reinforced Concrete Sidewalk	$7.00	$ 37,359.00	$9.00	$ 48,033.00	$6.00	$ 32,022.00	$8.75	$ 46,698.75	$10.00	$ 53,370.00	$7.00	$ 37,359.00
112	8	Ea.	Construct Directional Barrier Free Ramp	$444.00	$ 3,552.00	$2,800.00	$ 22,400.00	$1,500.00	$ 12,000.00	$1,600.00	$ 12,800.00	$2,600.00	$ 20,800.00	$3,587.00	$ 28,696.00
113	226	S.Y.	Construct, Maintain, Remove and Dispose of Temp. Type A Grade 2 Flex. Base	$19.00	$ 4,294.00	$30.00	$ 6,780.00	$30.00	$ 6,780.00	$25.00	$ 5,650.00	$40.00	$ 9,040.00	$83.00	$ 18,758.00
114	1,282	S.Y.	Furnish & Install 4-inch Topsoil	$3.00	$ 3,846.00	$10.00	$ 12,820.00	$7.00	$ 8,974.00	$3.00	$ 3,846.00	$56.00	$ 71,792.00	$9.00	$ 11,538.00
115	1,282	S.Y.	Furnish, Install, Fertilize and Maintain Solid Block Sod Bermuda	$12.00	$ 15,384.00	$10.00	$ 12,820.00	$7.00	$ 8,974.00	$12.00	$ 15,384.00	$25.00	$ 32,050.00	$10.00	$ 12,820.00
116	1	Ea.	Construct 8-Foot Recessed Curb Inlet	$6,250.00	$ 6,250.00	$4,000.00	$ 4,000.00	$7,200.00	$ 7,200.00	$7,500.00	$ 7,500.00	$8,000.00	$ 8,000.00	$7,477.00	$ 7,477.00
117	1	Ea.	Construct 6-Foot Recessed Curb Inlet	$5,725.00	$ 5,725.00	$3,800.00	$ 3,800.00	$6,000.00	$ 6,000.00	$6,900.00	$ 6,900.00	$6,000.00	$ 6,000.00	$7,197.00	$ 7,197.00
118	1	Ea.	Connect to Existing 18-inch RCP Storm Sewer	$1,365.00	$ 1,365.00	$1,200.00	$ 1,200.00	$2,400.00	$ 2,400.00	$500.00	$ 500.00	$1,200.00	$ 1,200.00	$3,024.00	$ 3,024.00
119	116	L.F.	Furnish & Install 18-inch Class III RCP Storm Sewer	$96.00	$ 11,136.00	$120.00	$ 13,920.00	$132.00	$ 15,312.00	$100.00	$ 11,600.00	$135.00	$ 15,660.00	$112.00	$ 12,992.00
120	67	L.F.	Furnish & Install 18-inch Class III RCP Culvert	$96.00	$ 6,432.00	$120.00	$ 8,040.00	$132.00	$ 8,844.00	$115.00	$ 7,705.00	$180.00	$ 12,060.00	$130.00	$ 8,710.00
121	2	Ea.	Construct 18" Safety End Treatment	$1,060.00	$ 2,120.00	$1,500.00	$ 3,000.00	$3,000.00	$ 6,000.00	$800.00	$ 1,600.00	$3,000.00	$ 6,000.00	$3,668.00	$ 7,336.00
122	1	Ea.	Furnish & Install 18-inch RCP Plug	$459.00	$ 459.00	$3,000.00	$ 3,000.00	$3,000.00	$ 3,000.00	$400.00	$ 400.00	$500.00	$ 500.00	$3,631.00	$ 3,631.00
123	2	Mo.	Furnish & Install Phase 1 Traffic Control Devices, Pavement Markings & Signs	$3,531.00	$ 7,062.00	$5,000.00	$ 10,000.00	$14,400.00	$ 28,800.00	$8,500.00	$ 17,000.00	$10,000.00	$ 20,000.00	$5,930.00	$ 11,860.00
124	1	Mo.	Furnish & Install Phase 2 Traffic Control Devices, Pavement Markings & Signs	$7.00	$ 7.00	$8,000.00	$ 8,000.00	$6,000.00	$ 6,000.00	$9,000.00	$ 9,000.00	$10,000.00	$ 10,000.00	$8,358.00	$ 8,358.00
125	15	L.F.	Furnish & Install 12" Wide Sold White Stop Bar	$62.00	$ 930.00	$125.00	$ 1,875.00	$2.00	$ 30.00	$26.00	$ 390.00	$50.00	$ 750.00	$100.00	$ 1,500.00
126	183	L.F.	Design and Provide Trench Safety Systems	$3.00	$ 549.00	$4.00	$ 732.00	$6.00	$ 1,098.00	$4.00	$ 732.00	$20.00	$ 3,660.00	$2.00	$ 366.00
127	2	Ea.	Furnish & Install Inlet Erosion Protection Device	$388.00	$ 776.00	$400.00	$ 800.00	$120.00	$ 240.00	$250.00	$ 500.00	$300.00	$ 600.00	$168.00	$ 336.00
128	2	Ea.	Remove Inlet Erosion Protection Device	$125.00	$ 250.00	$100.00	$ 200.00	$30.00	$ 60.00	$75.00	$ 150.00	$100.00	$ 200.00	$39.00	$ 78.00
129	614	L.F.	Furnish & Install Sediment Control Fence	$3.00	$ 1,842.00	$4.00	$ 2,456.00	$10.00	$ 6,140.00	$3.00	$ 1,842.00	$2.00	$ 1,228.00	$3.00	$ 1,842.00
130	614	L.F.	Remove and Properly Dispose of Sediment Control Fence	$0.50	$ 307.00	$2.00	$ 1,228.00	$2.00	$ 1,228.00	$0.80	$ 491.20	$1.50	$ 921.00	$1.00	$ 614.00
131	13	S.F.	Furnish & Install Permanent Aluminum Signs	$250.00	$ 3,250.00	$630.00	$ 8,190.00	$60.00	$ 780.00	$60.00	$ 780.00	$80.00	$ 1,040.00	$891.00	$ 11,583.00
132	3	Ea.	Furnish & Install Small Roadside Sign Assembly (Type 1P)	$1,086.00	$ 3,258.00	$800.00	$ 2,400.00	$1,800.00	$ 5,400.00	$600.00	$ 1,800.00	$900.00	$ 2,700.00	$896.00	$ 2,688.00
133	1	L.S.	Remove and Reinstall Standard Fire Hydrant Assembly	$1,365.00	$ 1,365.00	$5,000.00	$ 5,000.00	$7,200.00	$ 7,200.00	$1,700.00	$ 1,700.00	$8,000.00	$ 8,000.00	$3,766.00	$ 3,766.00
134	15	L.F.	Furnish & Install 6-inch D.I.P. and Fittings	$50.00	$ 750.00	$600.00	$ 9,000.00	$120.00	$ 1,800.00	$200.00	$ 3,000.00	$205.00	$ 3,075.00	$568.00	$ 8,520.00
135	1	Ea.	Furnish & Install 6-inch N.R.S. Gate Valve	$3,618.00	$ 3,618.00	$8,000.00	$ 8,000.00	$2,400.00	$ 2,400.00	$1,200.00	$ 1,200.00	$2,500.00	$ 2,500.00	$2,853.00	$ 2,853.00
			TOTAL AMOUNT BID DANE STREET IMPROVEMENTS (ITEMS 100 TO 135):		**$ 405,344.00**		**$ 503,901.00**		**$ 547,589.00**		**$ 578,957.45**		**$ 629,204.55**		**$ 693,315.00**

TABULATION OF BIDS

Date: April 21, 2024 @ 2:00 P.M.

Project: CITY OF AUBREY, TEXAS
DANE STREET IMPROVEMENTS AND
CITY HALL PARKING IMPROVEMENTS

BIRKHOFF, HENDRICKS & CARTER, L.L.P.
PROFESSIONAL ENGINEERS
Dallas, Texas

Item No.	Approximate Quantities	Unit	Description	BID OF J & L Construction, LLC 2220 San Jacinto Blvd., Suite 320 Denton, TX 76205 Luis Asencio 940-629-3571 gabriel@constructionjandl.com		BID OF Pace Construction Services, LLC 1904 Thornberry Dr. Melissa, TX 75454 Paul Anderson 972-832-9253		BID OF Vlex Construction LLC 3586 Bent Oak E. St. Greenville, TX 75401 Vijay Bheemireddy 469-422-1832 vijay@vlexconstruction.com		BID OF King George Traffic Solution, LLC 8330 US 67 Building C Alvarado, TX 76009 Mike Moore 214-232-1772 mike.moreekinggeorge.us		BID OF BCR2, LLC 195 Murray Farm Rd. Fairview, TX 75069 David Losburn 972-670-4745 dave@bcr2.com		BID OF Quality Excavation, LLC 104 Redfearn Road Aubrey, TX 76227 Jason Wilson 940-365-0800 jason@qualityexcavationltd.com	
				Unit Bid Price	Extension	Unit Bid Price	Extension	Unit Bid Price	Extension	Unit Bid Price	Extension	Unit Bid Price	Extension	Unit Bid Price	Extension
200	1	L.S.	For Mobilization, Bonds, Insurance & Shop Drawings Dane Street (Max 5% Other Items)	$7,015.00	$ 7,015.00	$5,000.00	$ 5,000.00	$14,400.00	$ 14,400.00	$17,000.00	$ 17,000.00	$16,043.46	$ 16,043.46	$21,902.00	$ 21,902.00
201	1	L.S.	For Preparing Parking Lot and Right-of Way, including Clearing & Grubbing	$2,495.00	$ 2,495.00	$15,000.00	$ 15,000.00	$12,000.00	$ 12,000.00	$69,900.00	$ 69,900.00	$5,000.00	$ 5,000.00	$8,003.00	$ 8,003.00
202	100	C.Y.	For Unclassified Excavation	$27.00	$ 2,700.00	$30.00	$ 3,000.00	$34.00	$ 3,400.00	$40.00	$ 4,000.00	$35.00	$ 3,500.00	$41.00	$ 4,100.00
203	240	S.Y.	Saw Cut and Remove and Properly Dispose of Existing HMAC Pavement	$5.00	$ 1,200.00	$15.00	$ 3,600.00	$18.00	$ 4,320.00	$15.00	$ 3,600.00	$25.00	$ 6,000.00	$27.00	$ 6,480.00
204	31	S.Y.	Saw Cut and Remove and Properly Dispose of Existing Reinf. Conc. Pavement	$23.00	$ 713.00	$54.00	$ 1,674.00	$24.00	$ 744.00	$42.00	$ 1,302.00	$25.00	$ 775.00	$35.00	$ 1,085.00
205	2	Ea.	Remove and Reset Mailboxes	$177.00	$ 354.00	$250.00	$ 500.00	$360.00	$ 720.00	$400.00	$ 800.00	$900.00	$ 1,800.00	$1,004.00	$ 2,008.00
206	200	S.Y.	Construct 6-inch Type A Grade 2 Flexible Base	$26.00	$ 5,200.00	$26.00	$ 5,200.00	$31.00	$ 6,200.00	$18.00	$ 3,600.00	$26.00	$ 5,200.00	$60.00	$ 12,000.00
207	156	S.Y.	Construct 8-inch Thick Reinforced Concrete Pavement	$93.00	$ 14,508.00	$100.00	$ 15,600.00	$90.00	$ 14,040.00	$115.00	$ 17,940.00	$84.00	$ 13,104.00	$106.00	$ 16,536.00
208	1,044	S.Y.	Construct 6-inch Thick Reinforced Concrete Pavement	$79.00	$ 82,476.00	$75.00	$ 78,300.00	$84.00	$ 87,696.00	$98.00	$ 102,312.00	$80.00	$ 83,520.00	$86.00	$ 89,784.00
209	511	L.F.	Construct Monolithic 6-inch Reinforced Concrete Curb	$13.00	$ 6,643.00	$1.00	$ 511.00	$7.00	$ 3,577.00	$13.00	$ 6,643.00	$8.00	$ 4,088.00	$38.00	$ 19,418.00
210	1,353	S.F.	Construct 4-inch Thick Reinforced Concrete Sidewalk	$7.00	$ 9,471.00	$9.00	$ 12,177.00	$6.00	$ 8,118.00	$11.50	$ 15,559.50	$10.00	$ 13,530.00	$7.00	$ 9,471.00
211	9	Ea.	Construct Directional Barrier Free Ramp	$900.00	$ 8,100.00	$2,800.00	$ 25,200.00	$1,500.00	$ 13,500.00	$1,600.00	$ 14,400.00	$2,600.00	$ 23,400.00	$3,570.00	$ 32,130.00
212	254	S.Y.	Furnish & Install 4-inch Topsoil	$7.00	$ 1,778.00	$10.00	$ 2,540.00	$7.00	$ 1,778.00	$4.00	$ 1,016.00	$56.00	$ 14,224.00	$9.00	$ 2,286.00
213	254	S.Y.	Furnish & Install Solid Block Sod Bermuda	$16.00	$ 4,064.00	$10.00	$ 2,540.00	$7.00	$ 1,778.00	$12.00	$ 3,048.00	$25.00	$ 6,350.00	$19.00	$ 4,826.00
214	140	L.F.	18-inch CMP with Slotted Drain	$198.00	$ 27,720.00	$80.00	$ 11,200.00	$144.00	$ 20,160.00	$280.00	$ 39,200.00	$390.00	$ 54,600.00	$254.00	$ 35,560.00
215	90	L.F.	18-inch CMP with Class H Embedment	$93.00	$ 8,370.00	$50.00	$ 4,500.00	$144.00	$ 12,960.00	$90.00	$ 8,100.00	$390.00	$ 35,100.00	$255.00	$ 22,950.00
216	36	L.F.	Furnish & Install 18-inch Class III RCP Culvert with Class C Embedment	$105.00	$ 3,780.00	$65.00	$ 2,340.00	$144.00	$ 5,184.00	$120.00	$ 4,320.00	$180.00	$ 6,480.00	$125.00	$ 4,500.00
217	1	Ea.	Construct 4:1 18" Sloped End Section Headwall	$1,065.00	$ 1,065.00	$2,000.00	$ 2,000.00	$1,800.00	$ 1,800.00	$800.00	$ 800.00	$4,000.00	$ 4,000.00	$3,668.00	$ 3,668.00
218	1	Ea.	Construct 4' x 4' Opening Drop Inlet	$5,540.00	$ 5,540.00	$5,000.00	$ 5,000.00	$2,400.00	$ 2,400.00	$6,500.00	$ 6,500.00	$4,000.00	$ 4,000.00	$7,932.00	$ 7,932.00
219	2	Mo.	Furnish & Install Traffic Control Devices, Pavement Markings & Signs	$840.00	$ 1,680.00	$1,000.00	$ 2,000.00	$6,000.00	$ 12,000.00	$9,000.00	$ 18,000.00	$10,000.00	$ 20,000.00	$5,930.00	$ 11,860.00
220	266	L.F.	Design and Provide Trench Safety Systems	$3.00	$ 798.00	$2.00	$ 532.00	$12.00	$ 3,192.00	$4.00	$ 1,064.00	$20.00	$ 5,320.00	$2.00	$ 532.00
221	3	Ea.	Furnish & Install Inlet Erosion Protection Device	$612.00	$ 1,836.00	$200.00	$ 600.00	$144.00	$ 432.00	$250.00	$ 750.00	$300.00	$ 900.00	$168.00	$ 504.00
222	3	Ea.	Remove Inlet Erosion Protection Device	$114.00	$ 342.00	$100.00	$ 300.00	$30.00	$ 90.00	$75.00	$ 225.00	$100.00	$ 300.00	$39.00	$ 117.00
223	517	L.F.	Furnish & Install Sediment Control Fence	$3.00	$ 1,551.00	$4.00	$ 2,068.00	$10.00	$ 5,170.00	$3.00	$ 1,551.00	$2.00	$ 1,034.00	$3.00	$ 1,551.00
224	517	L.F.	Remove and Properly Dispose of Sediment Control Fence	$0.50	$ 258.50	$2.00	$ 1,034.00	$2.00	$ 1,034.00	$0.75	$ 387.75	$1.50	$ 775.50	$1.00	$ 517.00
225	548	L.F.	Furnish & Install 6-inch Solid White Pavement Markings	$4.00	$ 2,192.00	$6.00	$ 3,288.00	$2.00	$ 1,096.00	$3.00	$ 1,644.00	$6.25	$ 3,425.00	$2.00	$ 1,096.00
226	581	L.F.	Furnish & Install Red Paint Fire Lane Marking	$4.00	$ 2,324.00	$5.00	$ 2,905.00	$2.00	$ 1,162.00	$3.50	$ 2,033.50	$6.25	$ 3,631.25	$2.00	$ 1,162.00
227	130	L.F.	Furnish & Install 4-inch Solid White Pedestrian Crossing Markings	$8.00	$ 1,040.00	$20.00	$ 2,600.00	$2.00	$ 260.00	$3.50	$ 455.00	$6.25	$ 812.50	$2.00	$ 260.00
			TOTAL AMOUNT BID CITY HALL PARKING LOT (ITEMS 200 TO 227):		**$ 205,213.50**		**$ 211,209.00**		**$ 239,211.00**		**$ 346,150.75**		**$ 336,912.71**		**$ 322,238.00**

TABULATION OF BIDS

Date: April 21, 2024 @ 2:00 P.M.

Project: CITY OF AUBREY, TEXAS
DANE STREET IMPROVEMENTS AND
CITY HALL PARKING IMPROVEMENTS

BIRKHOFF, HENDRICKS & CARTER, L.L.P.
PROFESSIONAL ENGINEERS
Dallas, Texas

Item No.	Approximate Quantities	Unit	Description	BID OF J & L Construction, LLC 2220 San Jacinto Blvd., Suite 320 Denton, TX 76205 Luis Asencio 940-629-3571 gabriel@constructionjandl.com		BID OF Pace Construction Services, LLC 1904 Thornberry Dr. Melissa, TX 75454 Paul Anderson 972-832-9253		BID OF Vlex Construction LLC 3586 Bent Oak E. St. Greenville, TX 75401 Vijay Bheemireddy 469-422-1832 vijay@vlexconstruction.com		BID OF King George Traffic Solution, LLC 8330 US 67 Building C Alvarado, TX 76009 Mike Moore 214-232-1772 mike.moreekinggeorge.us		BID OF BCR2, LLC 195 Murray Farm Rd. Fairview, TX 75069 David Losburn 972-670-4745 dave@bcr2.com		BID OF Quality Excavation, LLC 104 Redfearn Road Aubrey, TX 76227 Jason Wilson 940-365-0800 jason@qualityexcavationltd.com	
				Unit Bid Price	Extension	Unit Bid Price	Extension	Unit Bid Price	Extension	Unit Bid Price	Extension	Unit Bid Price	Extension	Unit Bid Price	Extension
300	1	L.S.	Mobilization, Bonds, Insurance & Shop Drawings (Max 5% Other Items)	$7,275.00	$ 7,275.00	$5,000.00	$ 5,000.00	$12,000.00	$ 12,000.00	$7,200.00	$ 7,200.00	$4,947.30	$ 4,947.30	$18,944.00	$ 18,944.00
301	272	L.F.	Saw Cut Existing Asphalt Pavement	$5.00	$ 1,360.00	$13.00	$ 3,536.00	$2.00	$ 544.00	$4.00	$ 1,088.00	$8.00	$ 2,176.00	$3.00	$ 816.00
302	101	S.Y.	Remove and Dispose of Existing Asphalt Pavment	$8.00	$ 808.00	$48.00	$ 4,848.00	$18.00	$ 1,818.00	$22.00	$ 2,222.00	$25.00	$ 2,525.00	$34.00	$ 3,434.00
303	252	S.Y.	Remove and Dispose of Existing Concrete Pavement (Thickness Not Known)	$8.00	$ 2,016.00	$25.00	$ 6,300.00	$18.00	$ 4,536.00	$22.00	$ 5,544.00	$54.00	$ 13,608.00	$22.00	$ 5,544.00
304	92	C.Y.	Unclassified Excavation	$41.00	$ 3,772.00	$30.00	$ 2,760.00	$30.00	$ 2,760.00	$120.00	$ 11,040.00	$36.00	$ 3,312.00	$38.00	$ 3,496.00
305	307	S.Y.	Furnish and Install 6-inch Thick Flexible Base	$51.00	$ 15,657.00	$26.00	$ 7,982.00	$31.00	$ 9,517.00	$25.00	$ 7,675.00	$26.00	$ 7,982.00	$50.00	$ 15,350.00
306	215	S.Y.	Furnish & Install 6-inch Thick Reinforced Concrete Driveway	$90.00	$ 19,350.00	$75.00	$ 16,125.00	$84.00	$ 18,060.00	$130.00	$ 27,950.00	$82.00	$ 17,630.00	$91.00	$ 19,565.00
307	305	S.Y.	Furnish & Install 8-inch Thick Reinforced Concrete Driveway (Fire Station Driveway)	$95.00	$ 28,975.00	$100.00	$ 30,500.00	$90.00	$ 27,450.00	$130.00	$ 39,650.00	$98.00	$ 29,890.00	$98.00	$ 29,890.00
308	10	S.Y.	Remove and Replace Asphlat Pavement (Storm Sewer Line B)	$119.00	$ 1,190.00	$100.00	$ 1,000.00	$120.00	$ 1,200.00	$300.00	$ 3,000.00	$100.00	$ 1,000.00	$201.00	$ 2,010.00
309	40	L.F.	Furnish and Install 18-inch CMP with Slotted Drain (Line B)	$181.00	$ 7,240.00	$80.00	$ 3,200.00	$144.00	$ 5,760.00	$325.00	$ 13,000.00	$390.00	$ 15,600.00	$271.00	$ 10,840.00
310	60	L.F.	Furnish and Install 18-inch RCP Storm Drain (Line B)	$106.00	$ 6,360.00	$96.00	$ 5,760.00	$120.00	$ 7,200.00	$180.00	$ 10,800.00	$135.00	$ 8,100.00	$128.00	$ 7,680.00
311	1	Ea.	Furnish and Install 4-foot Diameter Storm Sewer Manhole (Line B)	$6,170.00	$ 6,170.00	$6,100.00	$ 6,100.00	$7,800.00	$ 7,800.00	$10,000.00	$ 10,000.00	$8,500.00	$ 8,500.00	$10,313.00	$ 10,313.00
312	140	L.F.	4-inch Wide White Parking Strip	$9.00	$ 1,260.00	$6.00	$ 840.00	$2.00	$ 280.00	$4.00	$ 560.00	$6.25	$ 875.00	$4.00	$ 560.00
313	9	Ea.	Pre-cast Concrete Wheel Stop	$382.00	$ 3,438.00	$250.00	$ 2,250.00	$300.00	$ 2,700.00	$360.00	$ 3,240.00	$150.00	$ 1,350.00	$145.00	$ 1,305.00
314	906	S.F.	Solid Block Sodding	$2.00	$ 1,812.00	$10.00	$ 9,060.00	$7.00	$ 6,342.00	$2.00	$ 1,812.00	$2.50	$ 2,265.00	$10.00	$ 9,060.00
			TOTAL AMOUNT BID DOWNTOWN FIRE STATION PARKING LOT (ITEMS 300 TO 314):		**$ 106,683.00**		**$ 105,261.00**		**$ 107,967.00**		**$ 144,781.00**		**$ 119,760.30**		**$ 138,807.00**
			TOTAL AMOUNT BID		**$717,240.50**		**$820,371.00**		**$894,767.00**		**$1,069,889.20**		**$1,085,877.56**		**$1,154,360.00**

	Bidder wrote incorrect Extended Amount for Item #124 of $1,302.00. The correct Extended Amount is $7.00 Difference of ($1,295.00). Incorect Total for Dane St. of $406,639.00. Correct Dane Street Total is $405,344.00.
	Bidder wrote incorrect Extended Amount for Item #104 of $17,250.00. The correct Extended Amount is $17,920.00 Difference of +$670.00. Incorrect Total for Dane St. of $505,501.0. Correct total is $503,901.00
	Bidder wrote incorrect Total Dane Street Amount ($628,604.55) . Correct Dane Street Amount is $629,204.55. Difference of +$600.00. Bidder did not fill out "Description and Price in Words" column.
	Bidder wrote incorrect Total Downtown Fire Station Parking Lot Amount ($103,893.30) . Correct Downtown Fire Station Parking Lot Amount is $119,760.30. Difference of +$15,867.00.
	Bidder wrote incorrect Total Amount Bid ($1,069,440.56). Correct Total Amount Bid is $1,085,877.56.

BIRKHOFF, HENDRICKS & CARTER, L.L.P.
PROFESSIONAL ENGINEERS

11910 Greenville Ave., Suite 600 Dallas, Texas 75243 Phone (214) 361-7900 www.bhcllp.com

CRAIG M. KERKHOFF, P.E., C.F.M.
GARY C. HENDRICKS, P.E., R.P.L.S.
JOE R. CARTER, P.E.
ANDREW MATA, JR., P.E.

DEREK B. CHANEY, P.E., R.P.L.S.
JUSTIN R. IVY, P.E.
COOPER E. REINBOLD, P.E.
CHASE CRAWFORD, R.P.L.S.

April 29, 2025

Ms. Leanne Wilson
Executive Director of Operations
City of Aubrey, TX
107 S. Main Street
Aubrey, TX 76227

Re: Dane Street Improvements and City Hall Parking Improvements
Proposal Award Recommendation

Dear Ms. Wilson:

Sealed competitive bid proposals were received and opened at 2:00 p.m., Monday, April 21, 2025, for the City of Aubrey Dane Street Improvements and City Hall Parking Improvements project. Six (6) bid proposals were received. The unit price bid proposals were tabulated, and the proposal tabulation is enclosed for the City's reference and files. There were corrections made to the bids submitted by J & L Construction, LLC, Pace Construction Services, LLC and BCR2, LLC. The corrections did not impact the order of the lowest two bids.

J & L Construction submitted the lowest total amount bid for the project in the amount of $717,240.50. The error in the bid resulted in a decrease of $1,295.00 from the amount read during the bid opening. The error was in the amount written being $7.00 and the extended amount being written as $1,302.00. We contacted J & L Construction, and they stated that they will accept the lower amount.

We checked the statement of qualifications and the references that J & L Construction, LLC, provided and found no irregularities on the Contractor. We also worked with J & L Construction on another project with successful results.

Based on the information provided in the proposal and our previous experience we recommend the City accept the proposal from J & L Construction, LLC and award them a contract in the total amount of $717,240.50 for the construction of the Dane Street Improvements and City Hall Parking Improvements project.

We are available to discuss our recommendation further at your convenience.

Sincerely,

Joe R. Carter, P.E., CFM

Enclosures – Proposal Tabulation

City Council Meeting
Staff Report
May 13, 2025

Agenda Item
Consider and take action on a 0.1745-acre land purchase located in the Keeneland Subdivision, Lot 26, Block F(2032 Westwood Drive), Aubrey, Texas, from Qualico Developments Inc. for municipal purposes in an amount not to exceed $80,000, exclusive of closing costs and authorize the City Manager to execute the appropriate documents.

Staff Contact
Leanne Wilson, Executive Director of Operations
lwilson@aubreytx.gov

Summary
This undeveloped lot is adjacent to the Pecan Creek Sewer Lift Station. It is needed to allow enough room to expand the lift station.

Financial Summary
This purchase is part of the Pecan Creek Lift Station expansion, and funds are available in the capital program.

Staff Recommended Action
Approve

Staff Recommended Motion
Motion to approve the purchase and authorize the City Manager to execute the documents.

PROMULGATED BY THE TEXAS REAL ESTATE COMMISSION (TREC)

11-04-2024

UNIMPROVED PROPERTY CONTRACT

NOTICE: Not For Use For Condominium Transactions

1. **PARTIES:** The parties to this contract are **Qualico Developments (US), Inc. a Delaware Corporation** (Seller) and **City of Aubrey, Texas** (Buyer). Seller agrees to sell and convey to Buyer and Buyer agrees to buy from Seller the Property defined below.

2. **PROPERTY:** Lot **26**, Block **F**, City of **Keeneland** Addition, **Aubrey**, County of **Denton**, Texas, known as **2032 Westwood Dr.** **76227** (address/zip code), or as described on attached exhibit together with all rights, privileges and appurtenances pertaining thereto (Property).
RESERVATIONS: Any reservation for oil, gas, or other minerals, water, timber, or other interests is made in accordance with an attached addendum.

3. **SALES PRICE:**
   A. Cash portion of Sales Price payable by Buyer at closing. . . . . $ **80,000.00**
   The term "Cash portion of the Sales Price" does not include proceeds from borrowing of any kind or selling other real property except as disclosed in this contract.
   B. Sum of all financing described in the attached: ☐ Third Party Financing Addendum, ☐ Loan Assumption Addendum, ☐ Seller Financing Addendum. . . . . $ _____
   C. Sales Price (Sum of A and B) . . . . . $ **80,000.00**
   D. The Sales Price ☐ will ☒ will not be adjusted based on the survey required by Paragraph 6C.
   If the Sales Price is adjusted, the Sales Price will be adjusted based on the difference between _____ acres and the acreage set forth in the survey required by Paragraph 6C. The difference in acreage (either increased or decreased) shall be multiplied by the sum of $_____ per acre and either added to or subtracted from the Sales Price stated in Paragraph 3C. If the Sales Price is adjusted by more than 10%, either party may terminate this contract by providing written notice to the other party within _____ days after the terminating party receives the survey. If neither party terminates this contract or if the variance is 10% or less, the adjustment will be made to the amount in ☐ 3A ☐ 3B ☐ proportionately to 3A and 3B.

4. **LEASES:**
   A. Except as disclosed in this contract, Seller is not aware of any leases affecting the Property. After the Effective Date, Seller may not, without Buyer's written consent, create a new lease, amend any existing lease, or convey any interest in the Property.
   B. NATURAL RESOURCE LEASES: "Natural Resource Lease" means an existing oil and gas, mineral, geothermal, water, wind, or other natural resource lease affecting the Property to which Seller is a party. Seller ☐ is ☒ is not a party to a Natural Resource Lease. If Seller is a party to a Natural Resource Lease, check one of the following:
   ☒ (1) Seller has delivered to Buyer a copy of all the Natural Resource Leases. In Sellers Posession
   ☐ (2) Seller has not delivered to Buyer a copy of all the Natural Resource Leases. Seller shall provide to Buyer a copy of all the Natural Resource Leases within 3 days after the Effective Date. Buyer may terminate the contract within **N/A** days after the date the Buyer receives all the Natural Resource Leases and the earnest money shall be refunded to Buyer.

5. **EARNEST MONEY AND TERMINATION OPTION:**
   A. DELIVERY OF EARNEST MONEY AND OPTION FEE: Within 3 days after the Effective Date, Buyer must deliver to **Kathy Haynes** (Escrow Agent) at **Chicago Title, Prosper, TX** (address): $ **500.00** as earnest money and $ **N/A** as the Option Fee. The earnest money and Option Fee shall be made payable to Escrow Agent and may be paid separately or combined in a single payment.
   (1) Buyer shall deliver additional earnest money of **$N/A** to Escrow Agent within _____ days after the Effective Date of this contract.
   (2) If the last day to deliver the earnest money, Option Fee, or the additional earnest money falls on a Saturday, Sunday, or legal holiday, the time to deliver the earnest money, Option Fee, or the additional earnest money, as applicable, is extended until the end of the next day that is not a Saturday, Sunday, or legal holiday.
   (3) The amount(s) Escrow Agent receives under this paragraph shall be applied first to the Option Fee, then to the earnest money, and then to the additional earnest money.
   (4) Buyer authorizes Escrow Agent to release and deliver the Option Fee to Seller at any time without further notice to or consent from Buyer, and releases Escrow Agent from liability for delivery of the Option Fee to Seller. The Option Fee will be credited to the Sales Price at closing.

Initialed for identification by Buyer _____ _____ and Seller _____ _____

Specialty Land Services LLC, 1341 S Preston Rd Celina TX 75034
Buddy Minett
Produced with Lone Wolf Transactions (zipForm Edition) 717 N Harwood St, Suite 2200, Dallas, TX 75201 Phone: 972.679-9488 Fax: 972.382.4748 www.lwolf.com
Keeneland Blk F

B. TERMINATION OPTION: For nominal consideration, the receipt of which Seller acknowledges, and Buyer's agreement to pay the Option Fee within the time required, Seller grants Buyer the unrestricted right to terminate this contract by giving notice of termination to Seller within N/A days after the Effective Date of this contract (Option Period). Notices under this paragraph must be given by 5:00 p.m. (local time where the Property is located) by the date specified. If Buyer gives notice of termination within the time prescribed: (i) the Option Fee will not be refunded and Escrow Agent shall release any Option Fee remaining with Escrow Agent to Seller; and (ii) any earnest money will be refunded to Buyer.

C. FAILURE TO TIMELY DELIVER EARNEST MONEY: If Buyer fails to deliver the earnest money within the time required, Seller may terminate this contract or exercise Seller's remedies under Paragraph 15, or both, by providing notice to Buyer before Buyer delivers the earnest money.

D. FAILURE TO TIMELY DELIVER OPTION FEE: If no dollar amount is stated as the Option Fee or if Buyer fails to deliver the Option Fee within the time required, Buyer shall not have the unrestricted right to terminate this contract under this Paragraph 5.

E. TIME: **Time is of the essence for this paragraph and strict compliance with the time for performance is required.**

6. TITLE POLICY AND SURVEY:

A. TITLE POLICY: Seller shall furnish to Buyer at ☐ Seller's ☒ Buyer's expense an owner's policy of title insurance (Title Policy) issued by **Chicago Title - Prosper** (Title Company) in the amount of the Sales Price, dated at or after closing, insuring Buyer against loss under the provisions of the Title Policy, subject to the promulgated exclusions (including existing building and zoning ordinances) and the following exceptions:

(1) Restrictive covenants common to the platted subdivision in which the Property is located.
(2) The standard printed exception for standby fees, taxes and assessments.
(3) Liens created as part of the financing described in Paragraph 3.
(4) Utility easements created by the dedication deed or plat of the subdivision in which the Property is located.
(5) Reservations or exceptions otherwise permitted by this contract or as may be approved by Buyer in writing.
(6) The standard printed exception as to marital rights.
(7) The standard printed exception as to waters, tidelands, beaches, streams, and related matters.
(8) The standard printed exception as to discrepancies, conflicts, shortages in area or boundary lines, encroachments or protrusions, or overlapping improvements:
☒ (i) will not be amended or deleted from the title policy; or
☐ (ii) will be amended to read, "shortages in area" at the expense of ☐ Buyer ☐ Seller.
(9) The exception or exclusion regarding minerals approved by the Texas Department of Insurance.

B. COMMITMENT: Within 20 days after the Title Company receives a copy of this contract, Seller shall furnish to Buyer a commitment for title insurance (Commitment) and, at Buyer's expense, legible copies of restrictive covenants and documents evidencing exceptions in the Commitment (Exception Documents) other than the standard printed exceptions. Seller authorizes the Title Company to deliver the Commitment and Exception Documents to Buyer at Buyer's address shown in Paragraph 21. If the Commitment and Exception Documents are not delivered to Buyer within the specified time, the time for delivery will be automatically extended up to 15 days or 3 days before the Closing Date, whichever is earlier. If the Commitment and Exception Documents are not delivered within the time required, Buyer may terminate this contract and the earnest money will be refunded to Buyer.

C. SURVEY: The survey must be made by a registered professional land surveyor acceptable to the Title Company and Buyer's lender(s). (Check one box only)

☐ (1) Within _____ days after the Effective Date of this contract, Seller shall furnish to Buyer and Title Company Seller's existing survey of the Property and a Residential Real Property Affidavit or Declaration promulgated by the Texas Department of Insurance (T-47 Affidavit or T-47.1 Declaration). Buyer shall obtain a new survey at Seller's expense no later than 3 days prior to Closing Date if Seller fails to furnish within the time prescribed both the: (i) existing survey; and (ii) affidavit or declaration. If the Title Company or Buyer's lender does not accept the existing survey, or the affidavit or declaration, Buyer shall obtain a new survey at ☐ Seller's ☐ Buyer's expense no later than 3 days prior to Closing Date.

☒ (2) Within 10 days after the Effective Date of this contract, Buyer may obtain a new survey at Buyer's expense. Buyer is deemed to receive the survey on the date of actual receipt or the date specified in this paragraph, whichever is earlier. If Buyer fails to obtain the survey, Buyer may not terminate the contract under Paragraph 2B of the Third Party Financing Addendum because the survey was not obtained.

☐ (3) Within _____ days after the Effective Date of this contract, Seller, at Seller's expense shall furnish a new survey to Buyer.

D. OBJECTIONS: Buyer may object in writing to (i) defects, exceptions, or encumbrances to title: disclosed on the survey other than items 6A(1) through (7) above; or disclosed in the Commitment other than items 6A(1) through (9) above; (ii) any portion of the Property lying in a special flood hazard area (Zone V or A) as shown on the current Federal Emergency Management Agency map; or (iii) any exceptions which prohibit the following use or activity: _____.

Specialty Land Services LLC, 1341 S Preston Rd Celina TX 75034
Buddy Minett
Produced with Lone Wolf Transactions (zipForm Edition) 717 N Harwood St, Suite 2200, Dallas, TX 75201 www.lwolf.com
Phone: 972.679-9488 Fax: 972.382.4748
Keeneland Blk F

Buyer must object the earlier of (i) the Closing Date or (ii) 3 days after Buyer receives the Commitment, Exception Documents, and the survey. Buyer's failure to object within the time allowed will constitute a waiver of Buyer's right to object; except that the requirements in Schedule C of the Commitment are not waived. Provided Seller is not obligated to incur any expense, Seller shall cure any timely objections of Buyer or any third party lender within 15 days after Seller receives the objections (Cure Period) and the Closing Date will be extended as necessary. If objections are not cured within the Cure Period, Buyer may, by delivering notice to Seller within 5 days after the end of the Cure Period: (i) terminate this contract and the earnest money will be refunded to Buyer; or (ii) waive the objections. If Buyer does not terminate within the time required, Buyer shall be deemed to have waived the objections. If the Commitment or survey is revised or any new Exception Document(s) is delivered, Buyer may object to any new matter revealed in the revised Commitment or survey or new Exception Document(s) within the same time stated in this paragraph to make objections beginning when the revised Commitment, survey, or Exception Document(s) is delivered to Buyer.

may, but is not obligated to,

or Seller elects not to cure

E. TITLE NOTICES:

(1) ABSTRACT OR TITLE POLICY: Broker advises Buyer to have an abstract of title covering the Property examined by an attorney of Buyer's selection, or Buyer should be furnished with or obtain a Title Policy. If a Title Policy is furnished, the Commitment should be promptly reviewed by an attorney of Buyer's choice due to the time limitations on Buyer's right to object.

(2) MEMBERSHIP IN PROPERTY OWNERS ASSOCIATION(S): The Property [X] is [ ] is not subject to mandatory membership in a property owners association(s). If the Property is subject to mandatory membership in a property owners association(s), Seller notifies Buyer under §5.012, Texas Property Code, that, as a purchaser of property in the residential community identified in Paragraph 2 in which the Property is located, you are obligated to be a member of the property owners association(s). Restrictive covenants governing the use and occupancy of the Property and all dedicatory instruments governing the establishment, maintenance, and operation of this residential community have been or will be recorded in the Real Property Records of the county in which the Property is located. Copies of the restrictive covenants and dedicatory instruments may be obtained from the county clerk. **You are obligated to pay assessments to the property owners association(s). The amount of the assessments is subject to change. Your failure to pay the assessments could result in enforcement of the association's lien on and the foreclosure of the Property.**

Section 207.003, Property Code, entitles an owner to receive copies of any document that governs the establishment, maintenance, or operation of a subdivision, including, but not limited to, restrictions, bylaws, rules and regulations, and a resale certificate from a property owners' association. A resale certificate contains information including, but not limited to, statements specifying the amount and frequency of regular assessments and the style and cause number of lawsuits to which the property owners' association is a party, other than lawsuits relating to unpaid ad valorem taxes of an individual member of the association. These documents must be made available to you by the property owners' association or the association's agent on your request.

If Buyer is concerned about these matters, the TREC promulgated Addendum for Property Subject to Mandatory Membership in a Property Owners Association should be used.

(3) STATUTORY TAX DISTRICTS: If the Property is situated in a utility or other statutorily created district providing water, sewer, drainage, or flood control facilities and services, Chapter 49, Texas Water Code, requires Seller to deliver and Buyer to sign the statutory notice relating to the tax rate, bonded indebtedness, or standby fee of the district prior to final execution of this contract.

(4) TIDE WATERS: If the Property abuts the tidally influenced waters of the state, §33.135, Texas Natural Resources Code, requires a notice regarding coastal area property to be included in the contract. An addendum containing the notice promulgated by TREC or required by the parties must be used.

(5) ANNEXATION: If the Property is located outside the limits of a municipality, Seller notifies Buyer under §5.011, Texas Property Code, that the Property may now or later be included in the extraterritorial jurisdiction of a municipality and may now or later be subject to annexation by the municipality. Each municipality maintains a map that depicts its boundaries and extraterritorial jurisdiction. To determine if the Property is located within a municipality's extraterritorial jurisdiction or is likely to be located within a municipality's extraterritorial jurisdiction, contact all municipalities located in the general proximity of the Property for further information.

(6) PROPERTY LOCATED IN A CERTIFICATED SERVICE AREA OF A UTILITY SERVICE PROVIDER: Notice required by §13.257, Water Code: The real property, described in Paragraph 2, that you are about to purchase may be located in a certificated water or sewer service area, which is authorized by law to provide water or sewer service to the properties in the certificated area. If your property is located in a certificated area there may be special costs or charges that you will be required to pay before you can receive water or sewer service. There may be a period required to construct lines or other facilities necessary to provide water or sewer service to your property. You are advised to determine if the property is in a certificated area and contact the utility service provider to determine the cost that you will be

required to pay and the period, if any, that is required to provide water or sewer service to your property. The undersigned Buyer hereby acknowledges receipt of the foregoing notice at or before the execution of a binding contract for the purchase of the real property described in Paragraph 2 or at closing of purchase of the real property.

(7) PUBLIC IMPROVEMENT DISTRICTS: If the Property is in a public improvement district, Seller must give Buyer written notice as required by §5.014, Property Code. An addendum containing the required notice shall be attached to this contract.

(8) TEXAS AGRICULTURAL DEVELOPMENT DISTRICT: The Property ☐ is ☒ is not located in a Texas Agricultural Development District. For additional information, contact the Texas Department of Agriculture.

(9) TRANSFER FEES: If the Property is subject to a private transfer fee obligation, §5.205, Property Code requires Seller to notify Buyer as follows: The private transfer fee obligation may be governed by Chapter 5, Subchapter G of the Texas Property Code.

(10) PROPANE GAS SYSTEM SERVICE AREA: If the Property is located in a propane gas system service area owned by a distribution system retailer, Seller must give Buyer written notice as required by §141.010, Texas Utilities Code. An addendum containing the notice approved by TREC or required by the parties should be used.

(11) NOTICE OF WATER LEVEL FLUCTUATIONS: If the Property adjoins an impoundment of water, including a reservoir or lake, constructed and maintained under Chapter 11, Water Code, that has a storage capacity of at least 5,000 acre-feet at the impoundment's normal operating level, Seller hereby notifies Buyer: "The water level of the impoundment of water adjoining the Property fluctuates for various reasons, including as a result of: (1) an entity lawfully exercising its right to use the water stored in the impoundment; or (2) drought or flood conditions."

(12) REQUIRED NOTICES: The following notices have been given or are attached to this contract (for example, utility, water, drainage, and public improvement districts): **Public Improvement District** _____

Seller's failure to provide applicable statutory notices may provide Buyer with remedies or rights to terminate the contract.

7. PROPERTY CONDITION:

A. ACCESS, INSPECTIONS AND UTILITIES: Seller shall permit Buyer and Buyer's agents access to the Property at reasonable times. Buyer may have the Property inspected by inspectors selected by Buyer and licensed by TREC or otherwise permitted by law to make inspections. Seller at Seller's expense shall immediately cause existing utilities to be turned on and shall keep the utilities on during the time this contract is in effect.
NOTICE: Buyer should determine the availability of utilities to the Property suitable to satisfy Buyer's needs.

B. ACCEPTANCE OF PROPERTY CONDITION: "As Is" means the present condition of the Property with any and all defects and without warranty except for the warranties of title and the warranties in this contract. Buyer's agreement to accept the Property As Is under Paragraph 7B (1) or (2) does not preclude Buyer from inspecting the Property under Paragraph 7A, from negotiating repairs or treatments in a subsequent amendment, or from terminating this contract during the Option Period, if any.
(Check one box only)

☒ (1) Buyer accepts the Property As Is.

☐ (2) Buyer accepts the Property As Is provided Seller, at Seller's expense, shall complete the following specific repairs and treatments: _____

(Do not insert general phrases, such as "subject to inspections" that do not identify specific repairs and treatments.)

C. COMPLETION OF REPAIRS AND TREATMENTS: Unless otherwise agreed in writing, Seller shall complete all agreed repairs and treatments prior to the Closing Date and obtain any required permits. The repairs and treatments must be performed by persons who are licensed to provide such repairs or treatments or, if no license is required by law, are commercially engaged in the trade of providing such repairs or treatments. Seller shall: (i) provide Buyer with copies of documentation from the repair person(s) showing the scope of work and payment for the work completed; and (ii) at Seller's expense, arrange for the transfer of any transferable warranties with respect to the repairs and treatments to Buyer at closing. If Seller fails to complete any agreed repairs and treatments prior to the Closing Date, Buyer may exercise remedies under Paragraph 15 or extend the Closing Date up to 5 days, if necessary, for Seller to complete repairs and treatments.

D. ENVIRONMENTAL MATTERS: Buyer is advised that the presence of wetlands, toxic substances, including asbestos and wastes or other environmental hazards, or the presence of a threatened or endangered species or its habitat may affect Buyer's intended use of the Property. If Buyer is concerned about these matters, an addendum promulgated by TREC or required by the parties should be used.

E. SELLER'S DISCLOSURE:

(1) Seller ☐ is ☒ is not aware of any flooding of the Property which has had a material adverse effect on the use of the Property.

(2) Seller ☐ is ☒ is not aware of any pending or threatened litigation, condemnation, or special assessment affecting the Property.

(3) Seller ☐ is ☒ is not aware of any environmental hazards that materially and adversely affect the Property.

(4) Seller ☐ is ☒ is not aware of any dumpsite, landfill, or underground tanks or containers now or previously located on the Property.
(5) Seller ☐ is ☒ is not aware of any wetlands, as defined by federal or state law or regulation, affecting the Property.
(6) Seller ☐ is ☒ is not aware of any threatened or endangered species or their habitat affecting the Property.
(7) Seller ☐ is ☒ is not aware that the Property is located ☐ wholly ☐ partly in a floodplain.
(8) Seller ☐ is ☒ is not aware that a tree or trees located on the Property has oak wilt.
If Seller is aware of any of the items above, explain (attach additional sheets if necessary): _____.

8. BROKERS AND SALES AGENTS:

A. BROKER OR SALES AGENT DISCLOSURE: Texas law requires a real estate broker or sales agent who is a party to a transaction or acting on behalf of a spouse, parent, child, business entity in which the broker or sales agent owns more than 10%, or a trust for which the broker or sales agent acts as a trustee or of which the broker or sales agent or the broker or sales agent's spouse, parent or child is a beneficiary, to notify the other party in writing before entering into a contract of sale. Disclose if applicable: N/A

B. BROKERS' FEES: All obligations of the parties for payment of brokers' fees are contained in separate written agreements.

9. CLOSING:

A. The closing of the sale will be on or before May 16, 2025, or within 7 days after objections made under Paragraph 6D have been cured or waived, whichever date is later (Closing Date). If either party fails to close the sale by the Closing Date, the non-defaulting party may exercise the remedies contained in Paragraph 15.

B. At closing:
(1) Seller shall execute and deliver a ~~general~~ special warranty deed conveying title to the Property to Buyer and showing no additional exceptions to those permitted in Paragraph 6 and furnish tax statements or certificates showing no delinquent taxes on the Property.
(2) Buyer shall pay the Sales Price in good funds acceptable to the Escrow Agent.
(3) Seller and Buyer shall execute and deliver any notices, statements, certificates, affidavits, releases, loan documents, transfer of any warranties, and other documents reasonably required for the closing of the sale and the issuance of the Title Policy.
(4) There will be no liens, assessments, or security interests against the Property which will not be satisfied out of the sales proceeds unless securing the payment of any loans assumed by Buyer and assumed loans will not be in default.
(5) Private transfer fees (as defined by Chapter 5, Subchapter G of the Texas Property Code) will be the obligation of Seller unless provided otherwise in this contract. Transfer fees assessed by a property owners' association are governed by the Addendum for Property Subject to Mandatory Membership in a Property Owners Association.

10. POSSESSION: Seller shall deliver to Buyer possession of the Property in its present or required condition upon closing and funding.

11. SPECIAL PROVISIONS: (This paragraph is intended to be used only for additional informational items. An informational item is a statement that completes a blank in a contract form, discloses factual information, or provides instructions. Real estate brokers and sales agents are prohibited from practicing law and shall not add to, delete, or modify any provision of this contract unless drafted by a party to this contract or a party's attorney.) _____.

12. SETTLEMENT AND OTHER EXPENSES:

A. The following expenses must be paid at or prior to closing:
(1) Seller shall pay the following expenses (Seller's Expenses):
(a) releases of existing liens, including prepayment penalties and recording fees; release of Seller's loan liability; tax statements or certificates; preparation of deed; one-half of escrow fee; brokerage fees that Seller has agreed to pay; and other expenses payable by Seller under this contract;
(b) the following amount to be applied to brokerage fees that Buyer has agreed to pay: ☐ $_____ or ☐ _____% of the Sales Price (check one box only); and
(c) an amount not to exceed $ _____ to be applied to other Buyer's Expenses.
(2) Buyer shall pay the following expenses (Buyer's Expenses): Appraisal fees; loan application fees; origination charges; credit reports; preparation of loan documents; interest on the notes from date of disbursement to one month prior to dates of first monthly payments; recording fees; copies of easements and restrictions; loan title policy with endorsements required by lender; loan-related inspection fees; photos; amortization schedules; one-half of escrow fee; all prepaid items, including required premiums for flood and hazard insurance, reserve deposits for insurance, ad valorem taxes and special governmental assessments; final compliance inspection; courier fee; repair inspection; underwriting fee; wire transfer fee; expenses incident to any loan; Private Mortgage Insurance Premium (PMI), VA Loan Funding Fee, or FHA Mortgage Insurance Premium (MIP) as required by the lender; brokerage fees that Buyer has agreed to pay; and other expenses payable by Buyer under this contract.

B. If any expense exceeds an amount expressly stated in this contract for such expense to be paid by a party, that party may terminate this contract unless the other party agrees to pay such excess. Buyer may not pay charges and fees expressly prohibited by FHA, VA, Texas Veterans Land Board or other governmental loan program regulations.

13. PRORATIONS AND ROLLBACK TAXES:

A. PRORATIONS: Taxes for the current year, interest, rents, and regular periodic maintenance fees, assessments, and dues (including prepaid items) will be prorated through the Closing Date. The tax proration may be calculated taking into consideration any change in exemptions that will affect the current year's taxes. If taxes for the current year vary from the amount prorated at closing, the parties shall adjust the prorations when tax statements for the current year are available. If taxes are not paid at or prior to closing, Buyer shall pay taxes for the current year.

B. ROLLBACK TAXES: If this sale or Buyer's use of the Property after closing results in the assessment of additional taxes, penalties or interest (Assessments) for periods prior to closing, the Assessments will be the obligation of Buyer. If Assessments are imposed because of Seller's use or change in use of the Property prior to closing, the Assessments will be the obligation of Seller. Obligations imposed by this paragraph will survive closing.

14. CASUALTY LOSS: If any part of the Property is damaged or destroyed by fire or other casualty after the Effective Date of this contract, Seller shall restore the Property to its previous condition as soon as reasonably possible, but in any event by the Closing Date. If Seller fails to do so due to factors beyond Seller's control, Buyer may (a) terminate this contract and the earnest money will be refunded to Buyer (b) extend the time for performance up to 15 days and the Closing Date will be extended as necessary or (c) accept the Property in its damaged condition with an assignment of insurance proceeds, if permitted by Seller's insurance carrier, and receive credit from Seller at closing in the amount of the deductible under the insurance policy. Seller's obligations under this paragraph are independent of any other obligations of Seller under this contract.

15. DEFAULT: If Buyer fails to comply with this contract, Buyer will be in default, and Seller may (a) enforce specific performance, seek such other relief as may be provided by law, or both, or (b) terminate this contract and receive the earnest money as liquidated damages, thereby releasing both parties from this contract. If Seller fails to comply with this contract, Seller will be in default and Buyer may (a) enforce specific performance, ~~seek such other relief as may be provided by law, or both~~, or (b) terminate this contract and receive the earnest money, thereby releasing both parties from this contract as Buyer's sole and exclusive remedy.

16. MEDIATION: It is the policy of the State of Texas to encourage resolution of disputes through alternative dispute resolution procedures such as mediation. Any dispute between Seller and Buyer related to this contract which is not resolved through informal discussion will be submitted to a mutually acceptable mediation service or provider. The parties to the mediation shall bear the mediation costs equally. This paragraph does not preclude a party from seeking equitable relief from a court of competent jurisdiction.

17. ATTORNEY'S FEES: A Buyer, Seller, Listing Broker, Other Broker, or Escrow Agent who prevails in any legal proceeding related to this contract is entitled to recover reasonable attorney's fees and all costs of such proceeding.

18. ESCROW:

A. ESCROW: The Escrow Agent is not (i) a party to this contract and does not have liability for the performance or nonperformance of any party to this contract, (ii) liable for interest on the earnest money and (iii) liable for the loss of any earnest money caused by the failure of any financial institution in which the earnest money has been deposited unless the financial institution is acting as Escrow Agent. Escrow Agent may require any disbursement made in connection with this contract to be conditioned on Escrow Agent's collection of good funds acceptable to Escrow Agent.

B. EXPENSES: At closing, the earnest money must be applied first to any cash down payment, then to Buyer's Expenses and any excess refunded to Buyer. If no closing occurs, Escrow Agent may: (i) require a written release of liability of the Escrow Agent from all parties before releasing any earnest money; and (ii) require payment of unpaid expenses incurred on behalf of a party. Escrow Agent may deduct authorized expenses from the earnest money payable to a party. "Authorized expenses" means expenses incurred by Escrow Agent on behalf of the party entitled to the earnest money that were authorized by this contract or that party.

C. DEMAND: Upon termination of this contract, either party or the Escrow Agent may send a release of earnest money to each party and the parties shall execute counterparts of the release and deliver same to the Escrow Agent. If either party fails to execute the release, either party may make a written demand to the Escrow Agent for the earnest money. If only one party makes written demand for the earnest money, Escrow Agent shall promptly provide a copy of the demand to the other party. If Escrow Agent does not receive written objection to the demand from the other party within 15 days, Escrow Agent may disburse the earnest money to the party making demand reduced by the amount of unpaid expenses incurred on behalf of the party receiving the earnest money and Escrow Agent may pay the same to the creditors. If Escrow Agent complies with the provisions of this paragraph, each party hereby releases Escrow Agent from all adverse claims related to the disbursal of the earnest money.

D. DAMAGES: Any party who wrongfully fails or refuses to sign a release acceptable to the Escrow Agent within 7 days of receipt of the request will be liable to the other party for (i) damages; (ii) the earnest money; (iii) reasonable attorney's fees; and (iv) all costs of suit.

E. NOTICES: Escrow Agent's notices will be effective when sent in compliance with Paragraph 21. Notice of objection to the demand will be deemed effective upon receipt by Escrow Agent.

19. REPRESENTATIONS: All covenants, representations and warranties in this contract survive closing. If any representation of Seller in this contract is untrue on the Closing Date, Seller will be in default. Unless expressly prohibited by written agreement, Seller may continue to show the Property and receive, negotiate and accept back up offers.

20. FEDERAL REQUIREMENTS: If Seller is a "foreign person," as defined by Internal Revenue Code and its regulations, or if Seller fails to deliver an affidavit or a certificate of non- foreign status to Buyer that Seller is not a "foreign person," then Buyer shall withhold from the sales proceeds an amount sufficient to comply with applicable tax law and deliver the same to the Internal Revenue Service together with appropriate tax forms. Internal Revenue Service regulations require filing written reports if currency in excess of specified amounts is received in the transaction.

21. NOTICES: All notices from one party to the other must be in writing and are effective when mailed to, hand-delivered at, or transmitted by fax or electronic transmission as follows:

To Buyer at: 107 S Main St
Aubrey, TX 76227
Phone: (940)440-9343
E-mail/Fax: lwilson@aubreytx.gov
E-mail/Fax:
With a copy to Buyer's agent at:
Buddy@specialtyland.com

To Seller at: 1440 The Lakes Blvd, Bldg C, Suite 200
Phlugerville, TX 78660
Phone: (512)703-9414
E-mail/Fax: ldeardorf@qualico.com
E-mail/Fax: john.vick@qualico.com
With a copy to Seller's agent at:
Qualico Developments (U.S.), Inc Att John Vick 6950 TPC

22. AGREEMENT OF PARTIES: This contract contains the entire agreement of the parties and cannot be changed except by their written agreement. Addenda which are a part of this contract are (check all applicable boxes):

- [ ] Third Party Financing Addendum
- [ ] Seller Financing Addendum
- [x] Addendum for Property Subject to Mandatory Membership in a Property Owners Association
- [ ] Buyer's Temporary Residential Lease
- [ ] Seller's Temporary Residential Lease
- [ ] Addendum for Reservation of Oil, Gas and Other Minerals
- [ ] Addendum for "Back-Up" Contract
- [ ] Addendum Concerning Right to Terminate Due to Lender's Appraisal
- [x] Addendum containing Notice of Obligation to Pay Improvement District Assessment
- [ ] Addendum for Coastal Area Property
- [ ] Environmental Assessment, Threatened or Endangered Species and Wetlands Addendum
- [ ] Addendum for Property Located Seaward of the Gulf Intracoastal Waterway
- [ ] Addendum for Sale of Other Property by Buyer
- [ ] Addendum for Property in a Propane Gas System Service Area
- [ ] Addendum for Section 1031 Exchange
- [x] Other (list): Addendum

23. CONSULT AN ATTORNEY BEFORE SIGNING: TREC rules prohibit real estate brokers and sales agents from giving legal advice. READ THIS CONTRACT CAREFULLY.

Buyer's Attorney is: _____
Phone: _____
Fax: _____
E-mail: _____

Seller's Attorney is: _____
Phone: _____
Fax: _____
E-mail: _____

Initialed for identification by Buyer _____ _____ and Seller _____ _____

EXECUTED the _____ day of _____, 20_____ (Effective Date).
(BROKER: FILL IN THE DATE OF FINAL ACCEPTANCE.)

Buyer
City of Aubrey, Texas

Seller
Qualico Developments (US), Inc. a Delaware Corporation

By:_____

Name:_____

Title:_____

Buyer

Seller

By:_____

Name:_____

Title:_____

The form of this contract has been approved by the Texas Real Estate Commission. TREC forms are intended for use only by trained real estate license holders. No representation is made as to the legal validity or adequacy of any provision in any specific transactions. It is not intended for complex transactions. Texas Real Estate Commission, P.O. Box 12188, Austin, TX 78711-2188, (512) 936-3000 (http://www.trec.texas.gov) TREC NO. 9-17. This form replaces TREC NO. 9-16.

Specialty Land Services LLC, 1341 S Preston Rd Celina TX 75034
Buddy Minett
Phone: 972.679-9488 Fax: 972.382.4748 Keeneland Blk F
Produced with Lone Wolf Transactions (zipForm Edition) 717 N Harwood St, Suite 2200, Dallas, TX 75201 www.lwolf.com

BROKER INFORMATION

(Print name(s) only. Do not sign)

Specialty Land Services LLC — Other Broker Firm — License No. **900809**

represents [X] Buyer only as Buyer's agent
[ ] Seller as Listing Broker's subagent

Buddy Minett — Associate's Name — License No. **0522235**

Team Name

buddy@specialtyland.com — Associate's Email Address — Phone **(972)679-9488**

Licensed Supervisor of Associate — License No.

8780 3rd St — Other Broker's Address — Phone

Frisco — City — State **TX** — Zip **75034**

Listing Broker Firm — License No.

represents [ ] Seller and Buyer as an intermediary
[ ] Seller only as Seller's agent

Listing Associate's Name — License No.

Team Name

Listing Associate's Email Address — Phone

Licensed Supervisor of Listing Associate — License No.

Listing Broker's Office Address — Phone

City — State — Zip

Selling Associate's Name — License No.

Team Name

Selling Associate's Email Address — Phone

Licensed Supervisor of Selling Associate — License No.

Selling Associate's Office Address

City — State — Zip

Disclosure: Pursuant to a previous, separate agreement, Listing Broker has agreed to pay Other Broker a fee ([ ] $ **N/A** or [ ] _____ % of the Sales Price). This disclosure is for informational purposes and does not change the previous agreement between brokers to pay or share a commission.

OPTION FEE RECEIPT

Receipt of $_____ (Option Fee) in the form of _____ is acknowledged.

Escrow Agent **Kathy Haynes** _____ Date

EARNEST MONEY RECEIPT

Receipt of $_____ Earnest Money in the form of _____ is acknowledged.

Escrow Agent _____ Received by _____ Email Address _____ Date/Time

Address _____ Phone

City _____ State _____ Zip _____ Fax

CONTRACT RECEIPT

Receipt of the Contract is acknowledged.

Escrow Agent _____ Received by _____ Email Address _____ Date

Address _____ Phone

City _____ State _____ Zip _____ Fax

ADDITIONAL EARNEST MONEY RECEIPT

Receipt of $_____ additional Earnest Money in the form of _____ is acknowledged.

Escrow Agent _____ Received by _____ Email Address _____ Date/Time

Address _____ Phone

City _____ State _____ Zip _____ Fax

TREC NO. 9-17

PROMULGATED BY THE TEXAS REAL ESTATE COMMISSION (TREC)

11-08-2021

ADDENDUM CONTAINING NOTICE OF OBLIGATION TO PAY IMPROVEMENT DISTRICT ASSESSMENT TO _____, TEXAS

(insert name of municipality or county levying assessment)

CONCERNING THE FOLLOWING PROPERTY

2032 Westwood Dr., Aubrey, TX 76227

(insert property address)

As the purchaser of the real property described above, you are obligated to pay assessments to _____, Texas, for the costs of a portion of a public improvement or services project (the "Authorized Improvements") undertaken for the benefit of the property within _____ (the "District") created under _____ (insert Subchapter A, Chapter 372, Local Government Code, or Chapter 382, Local Government Code, as applicable).

(insert name of municipality or county, as applicable)

(insert name of public improvement district)

AN ASSESSMENT HAS BEEN LEVIED AGAINST YOUR PROPERTY FOR THE AUTHORIZED IMPROVEMENTS, WHICH MAY BE PAID IN FULL AT ANY TIME. IF THE ASSESSMENT IS NOT PAID IN FULL, IT WILL BE DUE AND PAYABLE IN ANNUAL INSTALLMENTS THAT WILL VARY FROM YEAR TO YEAR DEPENDING ON THE AMOUNT OF INTEREST PAID, COLLECTION COSTS, ADMINISTRATIVE COSTS, AND DELINQUENCY COSTS.

The exact amount of the assessment may be obtained from _____.

(insert name of municipality or county, as applicable)

The exact amount of each annual installment will be approved each year by _____ in the annual service plan update for the district. More information about the assessments, including the amounts and due dates, may be obtained from _____.

(insert name of city council or county commissioners court, as applicable)

(insert name of municipality or county, as applicable)

Your failure to pay any assessment or any annual installment may result in penalties and interest being added to what you owe or in a lien on and the foreclosure of your property.

Signature of Seller Date Signature of Seller Date

Qualico Developments (US), Inc. a Delaware Corporation

The undersigned purchaser acknowledges receipt of this notice before the effective date of a binding contract for the purchase of the real property at the address described above.

Signature of Buyer Date Signature of Buyer Date

City of Aubrey, Texas

This form has been approved by the Texas Real Estate Commission for use with similarly approved or promulgated contract forms. Such approval relates to this form only. TREC forms are intended for use only by trained real estate license holders. No representation is made as to the legal validity or adequacy of any provision in any specific transactions. It is not suitable for complex transactions. Texas Real Estate Commission, P.O. Box 12188, Austin, TX 78711-2188, (512) 936-3000 (http://www.trec.texas.gov) TREC No. 53-0.

Specialty Land Services LLC, 1341 S Preston Rd Celina TX 75034 Phone: 972.679-9488 Fax: 972.382.4748 Keeneland Blk F
Buddy Minett
Produced with Lone Wolf Transactions (zipForm Edition) 231 Shearson Cr. Cambridge, Ontario, Canada N1T 1J5 www.lwolf.com

PROMULGATED BY THE TEXAS REAL ESTATE COMMISSION (TREC)

11-07-2022

ADDENDUM FOR PROPERTY SUBJECT TO MANDATORY MEMBERSHIP IN A PROPERTY OWNERS ASSOCIATION

(NOT FOR USE WITH CONDOMINIUMS)

ADDENDUM TO CONTRACT CONCERNING THE PROPERTY AT

2032 Westwood Dr. **Aubrey**

(Street Address and City)

(Name of Property Owners Association, (Association) and Phone Number)

A. SUBDIVISION INFORMATION: "Subdivision Information" means: (i) a current copy of the restrictions applying to the subdivision and bylaws and rules of the Association, and (ii) a resale certificate, all of which are described by Section 207.003 of the Texas Property Code.

(Check only one box):

☐ 1. Within _____ days after the effective date of the contract, Seller shall obtain, pay for, and deliver the Subdivision Information to the Buyer. If Seller delivers the Subdivision Information, Buyer may terminate the contract within 3 days after Buyer receives the Subdivision Information or prior to closing, whichever occurs first, and the earnest money will be refunded to Buyer. If Buyer does not receive the Subdivision Information, Buyer, as Buyer's sole remedy, may terminate the contract at any time prior to closing and the earnest money will be refunded to Buyer.

☐ 2. Within _____ days after the effective date of the contract, Buyer shall obtain, pay for, and deliver a copy of the Subdivision Information to the Seller. If Buyer obtains the Subdivision Information within the time required, Buyer may terminate the contract within 3 days after Buyer receives the Subdivision Information or prior to closing, whichever occurs first, and the earnest money will be refunded to Buyer. If Buyer, due to factors beyond Buyer's control, is not able to obtain the Subdivision Information within the time required, Buyer may, as Buyer's sole remedy, terminate the contract within 3 days after the time required or prior to closing, whichever occurs first, and the earnest money will be refunded to Buyer.

☐ 3. Buyer has received and approved the Subdivision Information before signing the contract. Buyer ☐ does ☐ does not require an updated resale certificate. If Buyer requires an updated resale certificate, Seller, at Buyer's expense, shall deliver it to Buyer within 10 days after receiving payment for the updated resale certificate from Buyer. Buyer may terminate this contract and the earnest money will be refunded to Buyer if Seller fails to deliver the updated resale certificate within the time required.

☐ 4. Buyer does not require delivery of the Subdivision Information.

The title company or its agent is authorized to act on behalf of the parties to obtain the Subdivision Information ONLY upon receipt of the required fee for the Subdivision Information from the party obligated to pay.

B. MATERIAL CHANGES. If Seller becomes aware of any material changes in the Subdivision Information, Seller shall promptly give notice to Buyer. Buyer may terminate the contract prior to closing by giving written notice to Seller if: (i) any of the Subdivision Information provided was not true; or (ii) any material adverse change in the Subdivision Information occurs prior to closing, and the earnest money will be refunded to Buyer.

C. FEES AND DEPOSITS FOR RESERVES: Buyer shall pay any and all Association fees, deposits, reserves, and other charges associated with the transfer of the Property not to exceed $ _____ and Seller shall pay any excess. This paragraph does not apply to: (i) regular periodic maintenance fees, assessments, or dues (including prepaid items) that are prorated by Paragraph 13, and (ii) costs and fees provided by Paragraphs A and D.

D. AUTHORIZATION: Seller authorizes the Association to release and provide the Subdivision Information and any updated resale certificate if requested by the Buyer, the Title Company, or any broker to this sale. If Buyer does not require the Subdivision Information or an updated resale certificate, and the Title Company requires information from the Association (such as the status of dues, special assessments, violations of covenants and restrictions, and a waiver of any right of first refusal), ☐ Buyer ☐ Seller shall pay the Title Company the cost of obtaining the information prior to the Title Company ordering the information.

NOTICE TO BUYER REGARDING REPAIRS BY THE ASSOCIATION: The Association may have the sole responsibility to make certain repairs to the Property. If you are concerned about the condition of any part of the Property which the Association is required to repair, you should not sign the contract unless you are satisfied that the Association will make the desired repairs.

Buyer **City of Aubrey, Texas** Seller **Qualico Developments (US), Inc. a Delaware Corporation**

Buyer Seller

The form of this addendum has been approved by the Texas Real Estate Commission for use only with similarly approved or promulgated forms of contracts. Such approval relates to this contract form only. TREC forms are intended for use only by trained real estate licensees. No representation is made as to the legal validity or adequacy of any provision in any specific transactions. It is not intended for complex transactions. Texas Real Estate Commission, P.O. Box 12188, Austin, TX 78711-2188, (512) 936-3000 (www.trec.texas.gov) TREC No. 36-10. This form replaces TREC No. 36-9.

Specialty Land Services LLC, 1341 S Preston Rd Celina TX 75034
Buddy Minett
Phone: 972.679-9488 Fax: 972.382.4748 Keeneland Blk F

Produced with Lone Wolf Transactions (zipForm Edition) 717 N Harwood St, Suite 2200, Dallas, TX 75201 www.lwolf.com

City Council Meeting
Staff Report
May 13, 2025

Agenda Item
Consideration and action on the purchase of an approximate 0.118 acre parcel of property located at 201 Sycamore St., Aubrey Texas in an amount not to exceed $360,000 exclusive of closing costs and authorize the City Manager to execute any necessary documents.

Staff Contact
Charles Kreidler, City Manager
kreidler@aubreytx.gov
940-440-9343

Summary

Financial Summary

Staff Recommended Action
Approve

Staff Recommended Motion
Motion to purchase property located at 201 Sycamore in an amount not to exceed $360,000 exclusive of closing costs and authorizing the city manager to execute the necessary documents.

TEXAS REALTORS

COMMERCIAL CONTRACT - IMPROVED PROPERTY

USE OF THIS FORM BY PERSONS WHO ARE NOT MEMBERS OF THE TEXAS ASSOCIATION OF REALTORS®, INC. IS NOT AUTHORIZED.
©Texas Association of REALTORS®, Inc. 2022

1. **PARTIES:** Seller agrees to sell and convey to Buyer the Property described in Paragraph 2. Buyer agrees to buy the Property from Seller for the sales price stated in Paragraph 3. The parties to this contract are:

Seller: Kenneth Wilson

Address: PO BOX 243, Aubrey, TX 76227
Phone: _____ E-mail: kenwilson471@gmail.com
Mobile: _____ Fax or Other: _____

Buyer: The City of Aubrey

Address: 107 S Main, Aubrey, TX 76227
Phone: (903)271-3568 E-mail: lwilson@aubreytx.gov
Mobile: _____ Fax or Other: _____

2. **PROPERTY:**

A. "Property" means that real property situated in Denton County, Texas at 201 Sycamore St, Aubrey, TX 76227 *(address)* and that is legally described on the attached Exhibit _____ or as follows:
O T AUBREY BLK 13 LOT 6

B. Seller will sell and convey the Property together with:
(1) all buildings, improvements, and fixtures;
(2) all rights, privileges, and appurtenances pertaining to the Property, including Seller's right, title, and interest in any minerals, utilities, adjacent streets, alleys, strips, gores, and rights-of-way;
(3) Seller's interest in all leases, rents, and security deposits for all or part of the Property;
(4) Seller's interest in all licenses and permits related to the Property;
(5) Seller's interest in all third party warranties or guaranties, if transferable, relating to the Property or any fixtures;
(6) Seller's interest in any trade names, if transferable, used in connection with the Property; and
(7) all Seller's tangible personal property located on the Property that is used in connection with the Property's operations except: _____ .
Any personal property not included in the sale must be removed by Seller prior to closing.

(Describe any exceptions, reservations, or restrictions in Paragraph 12 or an addendum.)
(If mineral rights are to be reserved an appropriate addendum should be attached.)
(If the Property is a condominium, attach Commercial Contract Condominium Addendum (TXR-1930) or (TXR-1946).)

3. **SALES PRICE:** At or before closing, Buyer will pay the following sales price for the Property:

A. Cash portion payable by Buyer at closing . . . . . $ 360,000.00

B. Sum of all financing described in Paragraph 4 . . . . . $ _____

C. Sales price (sum of 3A and 3B) . . . . . $ 360,000.00

4. FINANCING: Buyer will finance the portion of the sales price under Paragraph 3B as follows:

☐ A. Third Party Financing: One or more third party loans in the total amount of $ _____ . This contract:

☐ (1) is not contingent upon Buyer obtaining third party financing.

☐ (2) is contingent upon Buyer obtaining third party financing in accordance with the attached Commercial Contract Financing Addendum (TXR-1931).

☐ B. Assumption: In accordance with the attached Commercial Contract Financing Addendum (TXR-1931), Buyer will assume the existing promissory note secured by the Property, which balance at closing will be $ _____ .

☐ C. Seller Financing: Buyer will deliver a promissory note and deed of trust to Seller under the terms of the attached Commercial Contract Financing Addendum (TXR-1931) in the amount of $_____ .

5. EARNEST MONEY:

A. Not later than 3 days after the effective date, Buyer must deposit $ $3,600.00 as earnest money with Chicago Title - Prosper (title company) at 1180 E Prosper Trail (address) Kathy Haynes (closer). If Buyer fails to timely deposit the earnest money, Seller may terminate this contract or exercise any of Seller's other remedies under Paragraph 15 by providing written notice to Buyer before Buyer deposits the earnest money.

B. Buyer will deposit an additional amount of $ _____ with the title company to be made part of the earnest money on or before:

☐ (i) _____ days after Buyer's right to terminate under Paragraph 7B expires; or

☐ (ii) _____ .

Buyer will be in default if Buyer fails to deposit the additional amount required by this Paragraph 5B within 3 days after Seller notifies Buyer that Buyer has not timely deposited the additional amount.

C. Buyer may instruct the title company to deposit the earnest money in an interest-bearing account at a federally insured financial institution and to credit any interest to Buyer.

6. TITLE POLICY, SURVEY, AND UCC SEARCH:

A. Title Policy:

(1) Seller, at Seller's expense, will furnish Buyer an Owner's Policy of Title Insurance (the title policy) issued by any underwriter of the title company in the amount of the sales price, dated at or after closing, insuring Buyer against loss under the title policy, subject only to:

(a) those title exceptions permitted by this contract or as may be approved by Buyer in writing; and

(b) the standard printed exceptions contained in the promulgated form of title policy unless this contract provides otherwise.

(2) The standard printed exception as to discrepancies, conflicts, or shortages in area and boundary lines, or any encroachments or protrusions, or any overlapping improvements:

☒ (a) will not be amended or deleted from the title policy.

☐ (b) will be amended to read "shortages in areas" at the expense of ☐ Buyer ☐ Seller.

(3) Within _____ days after the effective date, Seller will furnish Buyer a commitment for title insurance (the commitment) including legible copies of recorded documents evidencing title exceptions. Seller authorizes the title company to deliver the commitment and related documents to Buyer at Buyer's address.

Firehouse Real Estate Services, 3241 Preston Rd. Ste. 7 Frisco TX 75034 Phone: (214)532-3676 Fax: Kenneth Wilson
McKenzie Rosenbaum

Produced with Lone Wolf Transactions (zipForm Edition) 717 N Harwood St, Suite 2200, Dallas, TX 75201 www.lwolf.com

B. Survey: Within 21 days after the effective date:

[X] (1) Buyer will obtain a survey of the Property at Buyer's expense and deliver a copy of the survey to Seller. The survey must be made in accordance with the: (i) ALTA/NSPS Land Title Survey standards, or (ii) Texas Society of Professional Surveyors' standards for a Category 1A survey under the appropriate condition. Seller will reimburse Buyer _____ *(insert amount)* of the cost of the survey at closing, if closing occurs.

[ ] (2) Seller, at Seller's expense, will furnish Buyer a survey of the Property dated after the effective date. The survey must be made in accordance with the: (i) ALTA/NSPS Land Title Survey standards, or (ii) Texas Society of Professional Surveyors' standards for a Category 1A survey under the appropriate condition.

[ ] (3) Seller will deliver to Buyer and the title company a true and correct copy of Seller's most recent survey of the Property along with an affidavit required by the title company for approval of the existing survey. If the existing survey is not acceptable to the title company, [ ] Seller [ ] Buyer (updating party), will, at the updating party's expense, obtain a new or updated survey acceptable to the title company and deliver the acceptable survey to the other party and the title company within 30 days after the title company notifies the parties that the existing survey is not acceptable to the title company. The closing date will be extended daily up to 30 days if necessary for the updating party to deliver an acceptable survey within the time required. The other party will reimburse the updating party _____ *(insert amount or percentage)* of the cost of the new or updated survey at closing, if closing occurs.

C. UCC Search:

[ ] (1) Within _____ days after the effective date, Seller, at Seller's expense, will furnish Buyer a Uniform Commercial Code (UCC) search prepared by a reporting service and dated after the effective date. The search must identify documents that are on file with the Texas Secretary of State and the county where the Property is located that relate to all personal property on the Property and show, as debtor, Seller and all other owners of the personal property in the last 5 years.

[ ] (2) Buyer does not require Seller to furnish a UCC search.

D. Buyer's Objections to the Commitment, Survey, and UCC Search:

(1) Within _____ days after Buyer receives the last of the commitment, copies of the documents evidencing the title exceptions, any required survey, and any required UCC search, Buyer may object to matters disclosed in the items if: (a) the matters disclosed are a restriction upon the Property or constitute a defect or encumbrance to title to the real or personal property described in Paragraph 2 other than those permitted by this contract or liens that Seller will satisfy at closing or Buyer will assume at closing; or (b) the items show that any part of the Property lies in a special flood hazard area (an "A" or "V" zone as defined by FEMA). If the commitment or survey is revised or any new document evidencing a title exception is delivered, Buyer may object to any new matter revealed in such revision or new document. Buyer's objection must be made within the same number of days stated in this paragraph, beginning when the revision or new document is delivered to Buyer. If Paragraph 6B(1) applies, Buyer is deemed to receive the survey on the earlier of: (i) the date Buyer actually receives the survey; or (ii) the deadline specified in Paragraph 6B.

(2) Seller may, but is not obligated to, cure Buyer's timely objections within 15 days after Seller receives the objections. The closing date will be extended as necessary to provide such time to cure the objections. If Seller fails to cure the objections by the time required, Buyer may terminate

this contract by providing written notice to Seller within 5 days after the time by which Seller must cure the objections. If Buyer terminates, the earnest money, less any independent consideration under Paragraph 7B(1), will be refunded to Buyer.

(3) Buyer's failure to timely object or terminate under this Paragraph 6D is a waiver of Buyer's right to object except that Buyer will not waive the requirements in Schedule C of the commitment.

7. PROPERTY CONDITION:

A. Present Condition: Buyer accepts the Property in its present condition except that Seller, at Seller's expense, will complete the following before closing: **As is** _____

B. Feasibility Period: Buyer may terminate this contract for any reason within **N/A** days after the effective date (feasibility period) by providing Seller written notice of termination.

(1) Independent Consideration. *(Check only one box and insert amounts.)*

☐ (a) If Buyer terminates under this Paragraph 7B, the earnest money will be refunded to Buyer less $ _____ that Seller will retain as independent consideration for Buyer's unrestricted right to terminate. Buyer has tendered the independent consideration to Seller upon payment of the amount specified in Paragraph 5A to the title company. The independent consideration is to be credited to the sales price only upon closing of the sale. If no dollar amount is stated in this Paragraph 7B(1) or if Buyer fails to deposit the earnest money, Buyer will not have the right to terminate under this Paragraph 7B.

☐ (b) Not later than 3 days after the effective date, Buyer must pay $ _____ as independent consideration for Buyer's right to terminate by tendering such amount to the title company. Buyer authorizes escrow agent to release and deliver the independent consideration to Seller at any time upon Seller's request without further notice to or consent from Buyer. If Buyer terminates under this Paragraph 7B, the earnest money will be refunded to Buyer and Seller will retain the independent consideration. The independent consideration will be credited to the sales price only upon closing of the sale. If no dollar amount is stated in this Paragraph 7B(1)(b) or if Buyer fails to pay the independent consideration, Buyer will not have the right to terminate under this Paragraph 7B.

☐ (2) Feasibility Period Extension: Prior to the expiration of the initial feasibility period, Buyer may extend the feasibility period for a single additional period of ____ days by delivering $_____ to the title company as additional earnest money.

(a) $_____ of the additional earnest money will be retained by Seller as additional independent consideration for Buyer's unrestricted right to terminate, but will be credited to the sales price only upon closing of the sale. If Buyer terminates under this Paragraph 7B, the additional earnest money will be refunded to Buyer and Seller will retain the additional independent consideration.

(b) Buyer authorizes escrow agent to release and deliver to Seller the following at any time upon Seller's request without further notice to or consent from Buyer:
(i) The additional independent consideration.
(ii) *(Check no boxes or only one box.)*
☐ all or ☐ $ _____ of the remaining portion of the additional earnest money, which will be refunded to Buyer if Buyer terminates under this Paragraph 7B or if Seller defaults under this contract.

If no dollar amount is stated in this Paragraph 7B(2) as additional earnest money or as additional independent consideration, or if Buyer fails to timely deliver the additional earnest money, the extension of the feasibility period will not be effective.

C. Inspections, Studies, or Assessments:

(1) During the feasibility period, Buyer, at Buyer's expense, may complete or cause to be completed any and all inspections, studies, or assessments of the Property (including all improvements and fixtures) desired by Buyer.

(2) Seller, at Seller's expense, will turn on all utilities necessary for Buyer to make inspections, studies, or assessments.

(3) Buyer must:
(a) employ only trained and qualified inspectors and assessors;
(b) notify Seller, in advance, of when the inspectors or assessors will be on the Property;
(c) abide by any reasonable entry rules or requirements of Seller;
(d) not interfere with existing operations or occupants of the Property; and
(e) restore the Property to its original condition if altered due to inspections, studies, or assessments that Buyer completes or causes to be completed.

(4) Except for those matters that arise from the negligence of Seller or Seller's agents, Buyer is responsible for any claim, liability, encumbrance, cause of action, and expense resulting from Buyer's inspections, studies, or assessments, including any property damage or personal injury. Buyer will indemnify, hold harmless, and defend Seller and Seller's agents against any claim involving a matter for which Buyer is responsible under this paragraph. This paragraph survives termination of this contract.

D. Property Information:

(1) Delivery of Property Information: Within N/A days after the effective date, Seller will deliver to Buyer the following to the extent in Seller's possession: *(Check all that apply.)*

☐ (a) a current rent roll of all leases affecting the Property certified by Seller as true and correct;
☐ (b) copies of all current leases, including any mineral leases, pertaining to the Property, including any modifications, supplements, or amendments to the leases;
☐ (c) a current inventory of all personal property to be conveyed under this contract and copies of any leases for such personal property;
☐ (d) copies of all notes and deeds of trust against the Property that Buyer will assume or that Seller will not pay in full on or before closing;
☐ (e) copies of all current service, utility, maintenance, and management agreements relating to the ownership and operation of the Property;
☐ (f) copies of current utility capacity letters from the Property's water and sewer service provider;
☐ (g) copies of all current warranties and guaranties relating to all or part of the Property;
☐ (h) copies of fire, hazard, liability, and other insurance policies that currently relate to the Property;
☐ (i) copies of all leasing or commission agreements that currently relate to the tenants of all or part of the Property;
☐ (j) a copy of the "as-built" plans and specifications and plat of the Property;
☐ (k) copies of all invoices for utilities and repairs incurred by Seller for the Property in the 24 months immediately preceding the effective date;
☐ (l) a copy of Seller's income and expense statement for the Property from _____ to _____ ;
☐ (m) copies of all previous environmental assessments, geotechnical reports, studies, or analyses made on or relating to the Property;

☐ (n) real and personal property tax statements for the Property for the previous 2 calendar years;
☐ (o) Tenant reconciliation statements including, operating expenses, insurance and taxes for the Property from _____ to _____; and
☐ (p) _____
_____
_____.

(2) Return of Property Information: If this contract terminates for any reason, Buyer will, not later than 10 days after the termination date: *(Check all that apply.)*
☐ (a) return to Seller all those items described in Paragraph 7D(1) that Seller delivered to Buyer in other than an electronic format and all copies that Buyer made of those items;
☐ (b) delete or destroy all electronic versions of those items described in Paragraph 7D(1) that Seller delivered to Buyer or Buyer copied in any format; and
☐ (c) deliver to Seller copies of all inspection and assessment reports related to the Property that Buyer completed or caused to be completed.
This Paragraph 7D(2) survives termination of this contract.

E. Contracts Affecting Operations: Until closing, Seller: (1) will operate the Property in the same manner as on the effective date under reasonably prudent business standards; and (2) will not transfer or dispose of any part of the Property, any interest or right in the Property, or any of the personal property or other items described in Paragraph 2B or sold under this contract. After the feasibility period ends, Seller may not enter into, amend, or terminate any other contract that affects the operations of the Property without Buyer's written approval.

8. LEASES:

A. Each written lease Seller is to assign to Buyer under this contract must be in full force and effect according to its terms. Seller may not enter into any new lease, fail to comply with any existing lease, or make any amendment or modification to any existing lease without Buyer's written consent. Seller must disclose, in writing, if any of the following exist at the time Seller provides the leases to the Buyer or subsequently occur before closing:
(1) any failure by Seller to comply with Seller's obligations under the leases;
(2) any circumstances under any lease that entitle the tenant to terminate the lease or seek any offsets or damages;
(3) any non-occupancy of the leased premises by a tenant;
(4) any advance sums paid by a tenant under any lease;
(5) any concessions, bonuses, free rents, rebates, brokerage commissions, or other matters that affect any lease; and
(6) any amounts payable under the leases that have been assigned or encumbered, except as security for loan(s) assumed or taken subject to under this contract.

B. Estoppel Certificates: Within _____ days after the effective date, Seller will deliver to Buyer estoppel certificates signed not earlier than _____ by each tenant that leases space in the Property. The estoppel certificates must include the certifications contained in the current version of TXR Form 1938 - Commercial Tenant Estoppel Certificate and any additional information requested by a third party lender providing financing under Paragraph 4 if the third party lender requests such additional information at least 10 days prior to the earliest date that Seller may deliver the signed estoppel certificates.

Firehouse Real Estate Services, 3241 Preston Rd. Ste. 7 Frisco TX 75034 Phone: (214)532-3676 Fax: Kenneth Wilson
McKenzie Rosenbaum Produced with Lone Wolf Transactions (zipForm Edition) 717 N Harwood St, Suite 2200, Dallas, TX 75201 www.lwolf.com

9. BROKERS:

A. The brokers to this sale are:

Principal Broker: Buddy Minett

Agent: Buddy Minett
Address: 8780 3rd St
Frisco, TX 75034
Phone & Fax: (962)679-9488
E-mail: buddy@specialtyland.com
License No.: 522235

Cooperating Broker: _____

Agent: _____
Address: _____
Phone & Fax: _____
E-mail: _____
License No.: _____

Principal Broker: *(Check only one box)*
- [ ] represents Seller only.
- [x] represents Buyer only.
- [ ] is an intermediary between Seller and Buyer.

Cooperating Broker represents Buyer.

B. Fees: *(Check only (1) or (2) below.)*
(Complete the Agreement Between Brokers on page 15 only if (1) is selected.)

[x] (1) ~~Seller~~ Buyer will pay Principal Broker the fee specified by separate written commission agreement between Principal Broker and Seller. Principal Broker will pay Cooperating Broker the fee specified in the Agreement Between Brokers found below the parties' signatures to this contract.

[ ] (2) At the closing of this sale, Seller will pay:

Principal Broker a total cash fee of:
- [ ] _____ % of the sales price.
- [ ] _____.

Cooperating Broker a total cash fee of:
- [ ] _____ % of the sales price.
- [ ] _____.

The cash fees will be paid in _____ County, Texas. Seller authorizes the title company to pay the brokers from the Seller's proceeds at closing.

NOTICE: Chapter 62, Texas Property Code, authorizes a broker to secure an earned commission with a lien against the Property.

C. The parties may not amend this Paragraph 9 without the written consent of the brokers affected by the amendment.

10. CLOSING:

A. The date of the closing of the sale (closing date) will be on or before the later of:
(1) [ ] _____ days after the expiration of the feasibility period.
[ ] _____ *(specific date)*.
[x] 30 days after effective date of contract.
(2) 7 days after objections made under Paragraph 6D have been cured or waived.

B. If either party fails to close by the closing date, the non-defaulting party may exercise the remedies in Paragraph 15.

C. At closing, Seller will execute and deliver to Buyer, at Seller's expense, a ☐ general ☒ special warranty deed. The deed must include a vendor's lien if any part of the sales price is financed. The deed must convey good and indefeasible title to the Property and show no exceptions other than those permitted under Paragraph 6 or other provisions of this contract. Seller must convey the Property:
(1) with no liens, assessments, or Uniform Commercial Code or other security interests against the Property which will not be satisfied out of the sales price, unless securing loans Buyer assumes;
(2) without any assumed loans in default; and
(3) with no persons in possession of any part of the Property as lessees, tenants at sufferance, or trespassers except tenants under the written leases assigned to Buyer under this contract.

D. At closing, Seller, at Seller's expense, will also deliver to Buyer:
(1) tax statements showing no delinquent taxes on the Property;
(2) a bill of sale with warranties to title conveying title, free and clear of all liens, to any personal property defined as part of the Property in Paragraph 2 or sold under this contract;
(3) an assignment of all leases to or on the Property;
(4) to the extent that the following items are assignable, an assignment to Buyer of the following items as they relate to the Property or its operations:
(a) licenses and permits;
(b) service, utility, maintenance, management, and other contracts; and
(c) warranties and guaranties;
(5) a rent roll current on the day of the closing certified by Seller as true and correct;
(6) evidence that the person executing this contract is legally capable and authorized to bind Seller;
(7) an affidavit acceptable to the title company stating that Seller is not a foreign person or, if Seller is a foreign person, a written authorization for the title company to: (i) withhold from Seller's proceeds an amount sufficient to comply with applicable tax law; and (ii) deliver the amount to the Internal Revenue Service together with appropriate tax forms; and
(8) any notices, statements, certificates, affidavits, releases, and other documents required by this contract, the commitment, or law necessary for the closing of the sale and the issuance of the title policy, all of which must be completed and executed by Seller as necessary.

E. At closing, Buyer will:
(1) pay the sales price in good funds acceptable to the title company;
(2) deliver evidence that the person executing this contract is legally capable and authorized to bind Buyer;
(3) sign and send to each tenant in the Property a written statement that:
(a) acknowledges Buyer has received and is responsible for the tenant's security deposit; and
(b) specifies the exact dollar amount of the security deposit;
(4) sign an assumption of all leases then in effect; and
(5) execute and deliver any notices, statements, certificates, or other documents required by this contract or law necessary to close the sale.

F. Unless the parties agree otherwise, the closing documents will be as found in the basic forms in the current edition of the State Bar of Texas Real Estate Forms Manual without any additional clauses.

11. POSSESSION: Seller will deliver possession of the Property to Buyer upon closing and funding of this sale in its present condition with any repairs Seller is obligated to complete under this contract, ordinary wear and tear excepted. Any possession by Buyer before closing or by Seller after closing that is not authorized by a separate written lease agreement is a landlord-tenant at sufferance relationship between the parties.

12. SPECIAL PROVISIONS: The following special provisions apply and will control in the event of a conflict with other provisions of this contract. *(If special provisions are contained in an Addendum, identify the Addendum here and reference the Addendum in Paragraph 22D.)*

Buyer to allow Seller 90 days to end existing leases. Seller is entitled to retain any rents collected prior to Buyer taking possession.

13. SALES EXPENSES:

A. Seller's Expenses: Seller will pay for the following at or before closing:
(1) releases of existing liens, other than those liens assumed by Buyer, including prepayment penalties and recording fees;
(2) release of Seller's loan liability, if applicable;
(3) tax statements or certificates;
(4) preparation of the deed and any bill of sale;
(5) one-half of any escrow fee;
(6) costs to record any documents to cure title objections that Seller must cure; and
(7) other expenses that Seller will pay under other provisions of this contract.

B. Buyer's Expenses: Buyer will pay for the following at or before closing:
(1) all loan expenses and fees;
(2) preparation fees of any deed of trust;
(3) recording fees for the deed and any deed of trust;
(4) premiums for flood and hazard insurance as may be required by Buyer's lender;
(5) one-half of any escrow fee; and
(6) other expenses that Buyer will pay under other provisions of this contract.

14. PRORATIONS:

A. Prorations:

(1) Interest on any assumed loan, taxes, rents, and any expense reimbursements from tenants will be prorated through the closing date.
(2) If the amount of ad valorem taxes for the year in which the sale closes is not available on the closing date, taxes will be prorated on the basis of taxes assessed in the previous year. If the taxes for the year in which the sale closes vary from the amount prorated at closing, the parties will adjust the prorations when the tax statements for the year in which the sale closes become available. This Paragraph 14A(2) survives closing.
(3) If Buyer assumes a loan or is taking the Property subject to an existing lien, Seller will transfer all reserve deposits held by the lender for the payment of taxes, insurance premiums, and other charges to Buyer at closing and Buyer will reimburse such amounts to Seller by an appropriate adjustment at closing.

B. Rollback Taxes: If Seller's use or change in use of the Property before closing results in the assessment of additional taxes, penalties, or interest (assessments) for periods before closing, the assessments will be the obligation of Seller. If this sale or Buyer's use of the Property after closing results in additional assessments for periods before closing, the assessments will be the obligation of Buyer. This Paragraph 14B survives closing.

C. Rent and Security Deposits: At closing, Seller will tender to Buyer all security deposits and the following advance payments received by Seller for periods after closing: prepaid expenses, advance rental payments, and other advance payments paid by tenants. Rents prorated to one party but received by the other party will be remitted by the recipient to the party to whom it was prorated within 5 days after the rent is received. This Paragraph 14C survives closing.

15. DEFAULT:

A. If Buyer fails to comply with this contract, Buyer is in default and Seller, as Seller's sole remedy(ies), may terminate this contract and receive the earnest money, as liquidated damages for Buyer's failure except for any damages resulting from Buyer's inspections, studies or assessments in accordance with Paragraph 7C(4) which Seller may pursue, or
(Check if applicable)
☐ ~~enforce specific performance, or seek such other relief as may be provided by law.~~

B. If, without fault, Seller is unable within the time allowed to deliver the estoppel certificates, survey or the commitment, Buyer may:
(1) terminate this contract and receive the earnest money, less any independent consideration under Paragraph 7B(1), as liquidated damages and as Buyer's sole remedy; or
(2) extend the time for performance up to 15 days and the closing will be extended as necessary.

C. Except as provided in Paragraph 15B, if Seller fails to comply with this contract, Seller is in default and Buyer may:
(1) terminate this contract and receive the earnest money, less any independent consideration under Paragraph 7B(1), as liquidated damages and as Buyer's sole remedy; or
(2) enforce specific performance, or seek such other relief as may be provided by law, or both.

16. CASUALTY LOSS AND CONDEMNATION:

A. If any part of the Property is damaged or destroyed by fire or other casualty after the effective date, Seller must restore the Property to its previous condition as soon as reasonably possible and not later than the closing date. If, without fault, Seller is unable to do so, Buyer may:
(1) terminate this contract and the earnest money, less any independent consideration under Paragraph 7B(1), will be refunded to Buyer;
(2) extend the time for performance up to 15 days and closing will be extended as necessary; or
(3) accept at closing: (i) the Property in its damaged condition; (ii) an assignment of any insurance proceeds Seller is entitled to receive along with the insurer's consent to the assignment; and (iii) a credit to the sales price in the amount of any unpaid deductible under the policy for the loss.

B. If before closing, condemnation proceedings are commenced against any part of the Property, Buyer may:
(1) terminate this contract by providing written notice to Seller within 15 days after Buyer is advised of the condemnation proceedings and the earnest money, less any independent consideration under Paragraph 7B(1), will be refunded to Buyer; or
(2) appear and defend the condemnation proceedings and any award will, at Buyer's election, belong to: (a) Seller and the sales price will be reduced by the same amount; or (b) Buyer and the sales price will not be reduced.

17. ATTORNEY'S FEES: If Buyer, Seller, any broker, or the title company is a prevailing party in any legal proceeding brought under or with relation to this contract or this transaction, such party is entitled to recover from the non-prevailing parties all costs of such proceeding and reasonable attorney's fees. This Paragraph 17 survives termination of this contract.

18. ESCROW:

A. At closing, the earnest money will be applied first to any cash down payment, then to Buyer's closing costs, and any excess will be refunded to Buyer. If no closing occurs, the title company may require payment of unpaid expenses incurred on behalf of the parties and a written release of liability of the title company from all parties.

B. If one party makes written demand for the earnest money, the title company will give notice of the demand by providing to the other party a copy of the demand. If the title company does not receive written objection to the demand from the other party within 15 days after the date the title company sent the demand to the other party, the title company may disburse the earnest money to the party making demand, reduced by the amount of unpaid expenses incurred on behalf of the party receiving the earnest money and the title company may pay the same to the creditors.

C. The title company will deduct any independent consideration under Paragraph 7B(1) before disbursing any earnest money to Buyer and will pay the independent consideration to Seller.

D. If the title company complies with this Paragraph 18, each party hereby releases the title company from all claims related to the disbursal of the earnest money.

E. Notices under this Paragraph 18 must be sent by certified mail, return receipt requested. Notices to the title company are effective upon receipt by the title company.

F. Any party who wrongfully fails or refuses to sign a release acceptable to the title company within 7 days after receipt of the request will be liable to the other party for: (i) damages; (ii) the earnest money; (iii) reasonable attorney's fees; and (iv) all costs of suit.

G. ☐ Seller ☐ Buyer intend(s) to complete this transaction as a part of an exchange of like-kind properties in accordance with Section 1031 of the Internal Revenue Code, as amended. All expenses in connection with the contemplated exchange will be paid by the exchanging party. The other party will not incur any expense or liability with respect to the exchange. The parties agree to cooperate fully and in good faith to arrange and consummate the exchange so as to comply to the maximum extent feasible with the provisions of Section 1031 of the Internal Revenue Code. The other provisions of this contract will not be affected in the event the contemplated exchange fails to occur.

19. MATERIAL FACTS: To the best of Seller's knowledge and belief: *(Check only one box.)*

☒ A. Seller is not aware of any material defects to the Property except as stated in the attached Commercial Property Condition Statement (TXR-1408).

☐ B. Except as otherwise provided in this contract, Seller is not aware of:
(1) any subsurface: structures, pits, waste, springs, or improvements;
(2) any pending or threatened litigation, condemnation, or assessment affecting the Property;
(3) any environmental hazards or conditions that materially affect the Property;
(4) whether the Property is or has been used for the storage or disposal of hazardous materials or toxic waste, a dump site or landfill, or any underground tanks or containers;
(5) whether radon, asbestos containing materials, urea-formaldehyde foam insulation, lead-based paint, toxic mold (to the extent that it adversely affects the health of ordinary occupants), or other pollutants or contaminants of any nature now exist or ever existed on the Property;
(6) any wetlands, as defined by federal or state law or regulation, on the Property;
(7) any threatened or endangered species or their habitat on the Property;
(8) any present or past infestation of wood-destroying insects in the Property's improvements;
(9) any contemplated material changes to the Property or surrounding area that would materially and detrimentally affect the ordinary use of the Property;

(10) any material physical defects in the improvements on the Property; or
(11) any condition on the Property that violates any law or ordinance.

(Describe any exceptions to (1)-(11) in Paragraph 12 or an addendum.)

20. NOTICES: All notices between the parties under this contract must be in writing and are effective when hand-delivered, mailed by certified mail return receipt requested, sent by a national or regional overnight delivery service that provides a delivery receipt, or sent by confirmed facsimile transmission to the parties addresses or facsimile numbers stated in Paragraph 1. The parties will send copies of any notices to the broker representing the party to whom the notices are sent.

☐ A. Seller also consents to receive any notices by e-mail at Seller's e-mail address stated in Paragraph 1.
☒ B. Buyer also consents to receive any notices by e-mail at Buyer's e-mail address stated in Paragraph 1.

21. DISPUTE RESOLUTION: The parties agree to negotiate in good faith in an effort to resolve any dispute related to this contract that may arise. If the dispute cannot be resolved by negotiation, the parties will submit the dispute to mediation before resorting to arbitration or litigation and will equally share the costs of a mutually acceptable mediator. This paragraph survives termination of this contract. This paragraph does not preclude a party from seeking equitable relief from a court of competent jurisdiction.

22. AGREEMENT OF THE PARTIES:

A. This contract is binding on the parties, their heirs, executors, representatives, successors, and permitted assigns. This contract is to be construed in accordance with the laws of the State of Texas. If any term or condition of this contract shall be held to be invalid or unenforceable, the remainder of this contract shall not be affected thereby. All individuals signing represent that they have the authority to sign on behalf of and bind the party for whom they are signing.

B. This contract contains the entire agreement of the parties and may not be changed except in writing.

C. If this contract is executed in a number of identical counterparts, each counterpart is an original and all counterparts, collectively, constitute one agreement.

D. Addenda which are part of this contract are: *(Check all that apply.)*
☐ (1) Property Description Exhibit identified in Paragraph 2;
☐ (2) Commercial Contract Condominium Addendum (TXR-1930) or (TXR-1946);
☐ (3) Commercial Contract Financing Addendum (TXR-1931);
☐ (4) Commercial Property Condition Statement (TXR-1408);
☐ (5) Commercial Contract Addendum for Special Provisions (TXR-1940);
☐ (6) Addendum for Seller's Disclosure of Information on Lead-Based Paint and Lead-Based Paint Hazards (TXR-1906);
☐ (7) Notice to Purchaser of Real Property in a Water District (MUD);
☐ (8) Addendum for Coastal Area Property (TXR-1915);
☐ (9) Addendum for Property Located Seaward of the Gulf Intracoastal Waterway (TXR-1916);
☐ (10) Information About Brokerage Services (TXR-2501);
☐ (11) Information About Mineral Clauses in Contract Forms (TXR-2509);
☐ (12) Notice of Obligation to Pay Improvement District Assessment (TXR-1955, PID);
☐ (13) _____
_____.

(Note: Counsel for Texas REALTORS® has determined that any of the foregoing addenda which are promulgated by the Texas Real Estate Commission (TREC) or published by Texas REALTORS® are appropriate for use with this form.)

E. Buyer [X] may [ ] may not assign this contract. If Buyer assigns this contract, Buyer will be relieved of any future liability under this contract only if the assignee assumes, in writing, all of Buyer's obligations under this contract.

23. TIME: Time is of the essence in this contract. The parties require strict compliance with the times for performance. If the last day to perform under a provision of this contract falls on a Saturday, Sunday, or Federal Reserve Bank holiday, the time for performance is extended until the end of the next day which is not a Saturday, Sunday, or Federal Reserve Bank holiday.

24. EFFECTIVE DATE: The effective date of this contract for the purpose of performance of all obligations is the date the title company receipts this contract after all parties execute this contract.

25. ADDITIONAL NOTICES:

A. Buyer should have an abstract covering the Property examined by an attorney of Buyer's selection, or Buyer should be furnished with or obtain a title policy.

B. If the Property is situated in a utility or other statutorily created district providing water, sewer, drainage, or flood control facilities and services, Chapter 49, Texas Water Code, requires Seller to deliver and Buyer to sign the statutory notice relating to the tax rate, bonded indebtedness, or standby fees of the district before final execution of this contract.

C. Notice Required by §13.257, Water Code: "The real property, described below, that you are about to purchase may be located in a certificated water or sewer service area, which is authorized by law to provide water or sewer service to the properties in the certificated area. If your property is located in a certificated area there may be special costs or charges that you will be required to pay before you can receive water or sewer service. There may be a period required to construct lines or other facilities necessary to provide water or sewer service to your property. You are advised to determine if the property is in a certificated area and contact the utility service provider to determine the cost that you will be required to pay and the period, if any, that is required to provide water or sewer service to your property. The undersigned purchaser hereby acknowledges receipt of the foregoing notice at or before the execution of a binding contract for the purchase of the real property described in the notice or at closing of purchase of the real property." The real property is described in Paragraph 2 of this contract.

D. If the Property adjoins or shares a common boundary with the tidally influenced submerged lands of the state, §33.135, Texas Natural Resources Code, requires a notice regarding coastal area property to be included as part of this contract *(the Addendum for Coastal Area Property (TXR-1915) may be used).*

E. If the Property is located seaward of the Gulf Intracoastal Waterway, §61.025, Texas Natural Resources Code, requires a notice regarding the seaward location of the Property to be included as part of this contract *(the Addendum for Property Located Seaward of the Gulf Intracoastal Waterway (TXR-1916) may be used).*

F. If the Property is located outside the limits of a municipality, the Property may now or later be included in the extra-territorial jurisdiction (ETJ) of a municipality and may now or later be subject to annexation by the municipality. Each municipality maintains a map that depicts its boundaries and ETJ. To determine if the Property is located within a municipality's ETJ, Buyer should contact all municipalities located in the general proximity of the Property for further information.

G. If apartments or other residential units are on the Property and the units were built before 1978, federal law requires a lead-based paint and hazard disclosure statement to be made part of this contract *(the Addendum for Seller's Disclosure of Information on Lead-Based Paint and Lead-Based Paint Hazards (TXR-1906) may be used).*

H. Section 1958.154, Occupations Code requires Seller to provide Buyer a copy of any mold remediation certificate issued for the Property during the 5 years preceding the date the Seller sells the Property.

I. Brokers are not qualified to perform property inspections, surveys, engineering studies, environmental assessments, or inspections to determine compliance with zoning, governmental regulations, or laws. Buyer should seek experts to perform such services. Buyer should review local building codes, ordinances and other applicable laws to determine their effect on the Property. Selection of experts, inspectors, and repairmen is the responsibility of Buyer and not the brokers. Brokers are not qualified to determine the credit worthiness of the parties. NOTICE OF WATER LEVEL FLUCTUATIONS: If the Property adjoins an impoundment of water, including a reservoir or lake, constructed and maintained under Chapter 11, Water Code, that has a storage capacity of at least 5,000 acre-feet at the impoundment's normal operating level, Seller hereby notifies Buyer: "The water level of the impoundment of water adjoining the Property fluctuates for various reasons, including as a result of: (1) an entity lawfully exercising its right to use the water stored in the impoundment; or (2) drought or flood conditions."

J. PUBLIC IMPROVEMENT DISTRICTS: If the Property is in a public improvement district, Seller is required by §5.014, Property Code to give Buyer a written notice concerning the obligation to pay assessments. The form of the required notice is available as a part of the Notice of Obligation to Pay Improvement District Assessment (TXR-1955).

K. LICENSE HOLDER DISCLOSURE: Texas law requires a real estate license holder who is a party to a transaction or acting on behalf of a spouse, parent, child, business entity in which the license holder owns more than 10%, or a trust for which the license holder acts as a trustee or of which the license holder or the license holder's spouse, parent or child is a beneficiary, to notify the other party in writing before entering into a contract of sale. Disclose if applicable: _____

_____.

26. CONTRACT AS OFFER: The execution of this contract by the first party constitutes an offer to buy or sell the Property. Unless the other party accepts the offer by 5:00 p.m., in the time zone in which the Property is located, on _____, the offer will lapse and become null and void.

READ THIS CONTRACT CAREFULLY. The brokers and agents make no representation or recommendation as to the legal sufficiency, legal effect, or tax consequences of this document or transaction. CONSULT your attorney BEFORE signing.

Seller: Kenneth Wilson	**Buyer:** The City of Aubrey
By: Kenneth Wilson	By: Chris Rich
By (signature):	By (signature):
Printed Name: Kenneth Wilson	Printed Name: Chris Rich
Title:	Title: Mayor
By:	By:
By (signature):	By (signature):
Printed Name:	Printed Name:
Title:	Title:

Firehouse Real Estate Services, 3241 Preston Rd. Ste. 7 Frisco TX 75034 Phone: (214)532-3676 Fax: Kenneth Wilson
McKenzie Rosenbaum Produced with Lone Wolf Transactions (zipForm Edition) 717 N Harwood St, Suite 2200, Dallas, TX 75201 www.lwolf.com

AGREEMENT BETWEEN BROKERS

(use only if Paragraph 9B(1) is effective)

Principal Broker agrees to pay _____ (Cooperating Broker) a fee when the Principal Broker's fee is received. The fee to be paid to Cooperating Broker will be:

- ☐ $ _____ , or
- ☐ _____ % of the sales price, or
- ☐ _____ % of the Principal Broker's fee.

The title company is authorized and directed to pay Cooperating Broker from Principal Broker's fee at closing. This Agreement Between Brokers supersedes any prior offers and agreements for compensation between brokers.

Principal Broker: _____

By: _____

Cooperating Broker: _____

By: _____

ATTORNEYS

Seller's attorney: _____

Address: _____

Phone & Fax: _____

E-mail: _____

Seller's attorney requests copies of documents, notices, and other information:

- ☐ the title company sends to Seller.
- ☐ Buyer sends to Seller.

Buyer's attorney: _____

Address: _____

Phone & Fax: _____

E-mail: _____

Buyer's attorney requests copies of documents, notices, and other information:

- ☐ the title company sends to Buyer.
- ☐ Seller sends to Buyer.

ESCROW RECEIPT

The title company acknowledges receipt of:

- ☐ A. the contract on this day _____ (effective date);
- ☐ B. earnest money in the amount of $ _____ in the form of _____ on _____ .

Title company: _____

By: _____

Assigned file number (GF#): _____

Address: _____

Phone & Fax: _____

E-mail: _____

Firehouse Real Estate Services, 3241 Preston Rd. Ste. 7 Frisco TX 75034 Phone: (214)532-3676 Fax: Kenneth Wilson
McKenzie Rosenbaum Produced with Lone Wolf Transactions (zipForm Edition) 717 N Harwood St, Suite 2200, Dallas, TX 75201 www.lwolf.com

City Council Meeting
Staff Report
May 13, 2025

Agenda Item
Receive a presentation and discuss, and provide direction to staff regarding bonding projects in the capital improvement plan, the I & S tax rate, future initiatives, municipal operations, projects, and strategic plans not limited to, but including:

a. Property acquisition
b. Current and Future CIP projects
c. City departments and services as part of the CIP
d. Water and Wastewater projects
e. Bonding estimate from Financial Advisor
f. Bonding for CIP projects
g. Discuss dates for future budget workshops

Staff Contact

Summary

Financial Summary

Staff Recommended Action

Staff Recommended Motion